US010005651B2

(12) **United States Patent**
Baaske et al.

(10) **Patent No.: US 10,005,651 B2**
(45) **Date of Patent: Jun. 26, 2018**

(54) **IMPLEMENTS AND METHODS OF MANUFACTURING AND USING SAME**

(71) Applicant: **JS Innovations LLC**, Schererville, IN (US)

(72) Inventors: **John Baaske**, Dyer, IN (US); **Stacy Deming**, Dyer, IN (US); **Marc W. Pentecost**, Valparaiso, IN (US)

(73) Assignee: **JS Innovations LLC**, Schererville, IN (US)

(*) Notice: Subject to any disclaimer, the term of this patent is extended or adjusted under 35 U.S.C. 154(b) by 86 days.

(21) Appl. No.: **15/062,752**

(22) Filed: **Mar. 7, 2016**

(65) **Prior Publication Data**

US 2016/0257545 A1 Sep. 8, 2016

Related U.S. Application Data

(60) Provisional application No. 62/129,361, filed on Mar. 6, 2015.

(51) **Int. Cl.**

B66F 19/00	(2006.01)
B66F 9/18	(2006.01)
E02F 3/96	(2006.01)
E02F 5/10	(2006.01)

(52) **U.S. Cl.**

CPC ***B66F 9/18*** (2013.01); ***E02F 3/96*** (2013.01); ***E02F 5/10*** (2013.01)

(58) **Field of Classification Search**

CPC B66F 19/00

USPC 414/685, 722, 723, 727, 912; 37/407, 37/444

See application file for complete search history.

(56) **References Cited**

U.S. PATENT DOCUMENTS

2,806,682	A	9/1957	Ankershell	
3,103,076	A	9/1963	Schultz	
3,542,435	A	11/1970	Herrmann	
4,164,247	A	8/1979	Wolf	
4,450,916	A *	5/1984	Francis	A01B 27/00 172/147
4,903,418	A	2/1990	London	
5,628,130	A	5/1997	Desrochers	
5,953,839	A *	9/1999	Meeks	E02F 3/963 172/247
6,146,081	A	11/2000	Anderson	
6,200,083	B1 *	3/2001	Hein	B66F 9/19 414/607
6,287,072	B1 *	9/2001	Wasilas	E02F 3/404 37/406
6,301,809	B1 *	10/2001	Staggs, Jr.	E02F 3/404 37/444
6,308,440	B1	10/2001	Mueller	
6,578,297	B1	6/2003	Forsberg	
7,104,745	B2	9/2006	Ochoa	

(Continued)

Primary Examiner — Joseph Dillon, Jr.

(74) *Attorney, Agent, or Firm* — Hartman Global IP Law; Gary Hartman; Domenica N. S. Hartman

(57) **ABSTRACT**

Implements for moving a first body from atop a surface includes a body configured to be removably secured to a host machine, a leading edge of the body configured to be located within a gap between the first body and the surface, and a concave curved profile above the leading edge and having a shape such that as the leading edge is forced into the gap, the curved profile contacts the first body causing the first body to roll in a direction away from the implement.
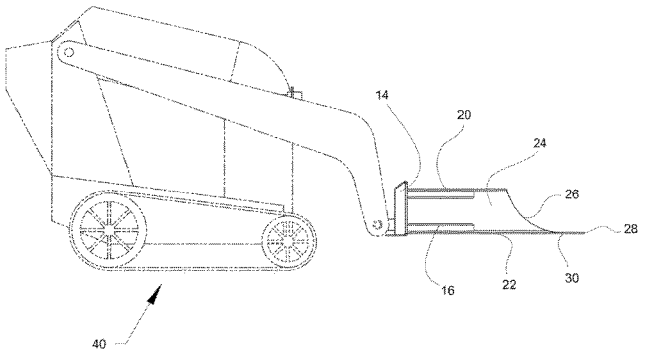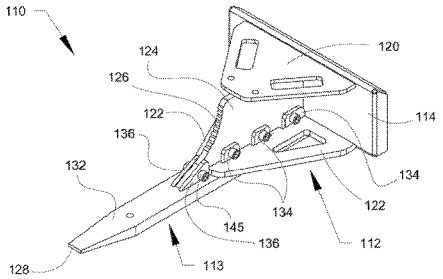
9 Claims, 10 Drawing Sheets