US010001151B2

(12) **United States Patent**
Moss et al.

(10) **Patent No.: US 10,001,151 B2**
(45) **Date of Patent: Jun. 19, 2018**

(54) **AIR FLOW HOOD**

(71) Applicant: **Dwyer Instruments, Inc.**, Michigan City, IN (US)

(72) Inventors: **Robert Austin Moss**, Saint Joseph, MI (US); **Alejandro Ignacio Baez Guada**, Chicago, IL (US)

(73) Assignee: **Dwyer Instruments, Inc.**, Michigan City, IN (US)

(*) Notice: Subject to any disclaimer, the term of this patent is extended or adjusted under 35 U.S.C. 154(b) by 185 days.

(21) Appl. No.: **15/050,813**

(22) Filed: **Feb. 23, 2016**

(65) **Prior Publication Data**

US 2016/0252114 A1 Sep. 1, 2016

Related U.S. Application Data

(60) Provisional application No. 62/121,222, filed on Feb. 26, 2015.

(51) **Int. Cl.**

F15D 1/02	(2006.01)
F24F 13/06	(2006.01)
G01F 1/684	(2006.01)

(52) **U.S. Cl.**

CPC ***F15D 1/02*** (2013.01); ***F24F 11/74*** (2018.01); ***F24F 13/06*** (2013.01); ***G01F 1/684*** (2013.01); *F24F 2110/30* (2018.01); *F24F 2221/14* (2013.01)

(58) **Field of Classification Search**

CPC . F15D 1/02; F24F 11/025; F24F 13/06; F24F 2011/0038; F24F 2221/14; G01F 1/684

See application file for complete search history.

(56) **References Cited**

U.S. PATENT DOCUMENTS

3,685,355 A *	8/1972	DeBaun	G01F 1/36	73/861.66
3,733,900 A *	5/1973	De Baun	G01F 1/40	138/37
3,748,901 A *	7/1973	DeBaun	G01F 1/40	73/861.66
4,030,358 A *	6/1977	Noll	G01P 5/00	73/861.66
4,481,829 A *	11/1984	Shortridge	G01F 1/46	73/861.66

(Continued)

FOREIGN PATENT DOCUMENTS

EP	2557368 A1	2/2013
WO	2008115138 A1	9/2008

OTHER PUBLICATIONS

Partial International Search Report to corresponding International Application No. PCT/US2016/019069, 2 pages.

Primary Examiner — Lisa Caputo
Assistant Examiner — Nathaniel T Woodward
(74) *Attorney, Agent, or Firm* — Tarolli, Sundheim, Covell & Tummino LLP

(57) **ABSTRACT**

An apparatus for measuring airflow through a diffuser of an HVAC system includes a hood for being positioned adjacent the diffuser so that airflow discharged from the diffuser is directed into the hood. The hood is configured to divide and direct the airflow through a plurality of discharge channels. Sensor probes measure the airflow through each discharge channel.
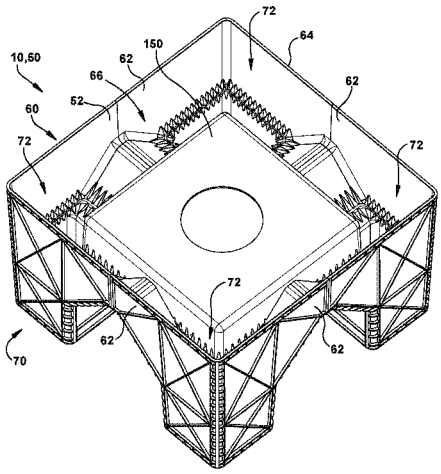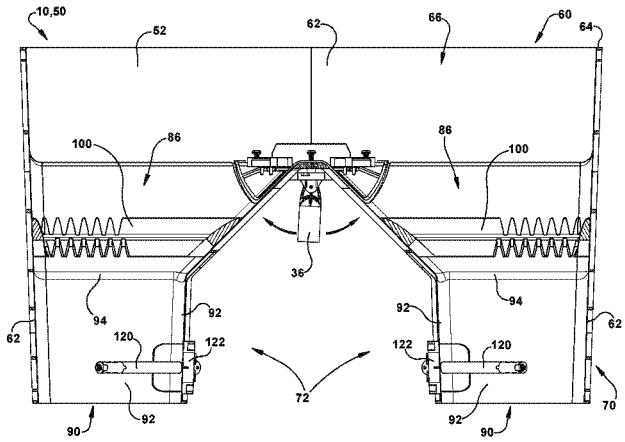
25 Claims, 16 Drawing Sheets