No. 774,250. PATENTED NOV. 8, 1904.

H. HUBBELL.

SEPARABLE ATTACHMENT PLUG.

APPLICATION FILED FEB. 26, 1903.

NO MODEL.

Fig. 1.

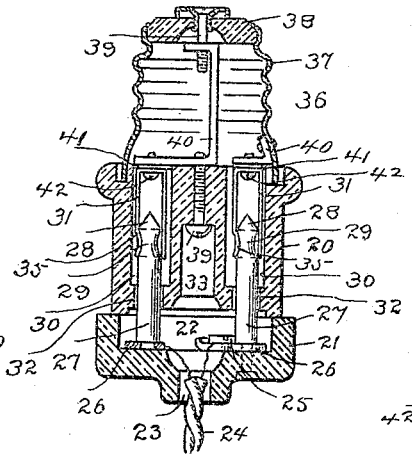

Fig. 2.

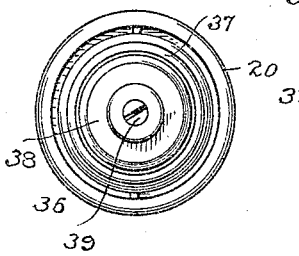

Fig. 3.

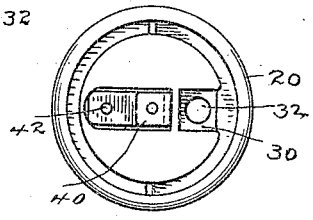

Fig. 4.

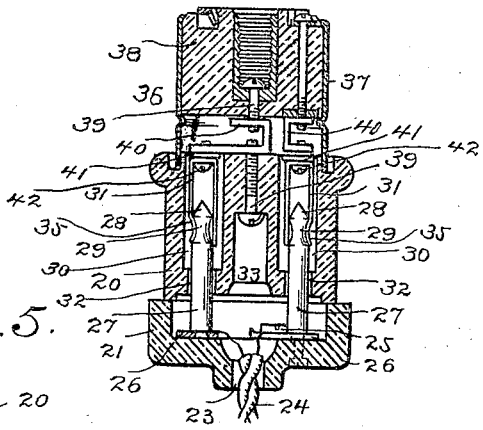

Fig. 5.

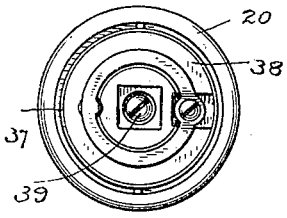

Fig. 6.

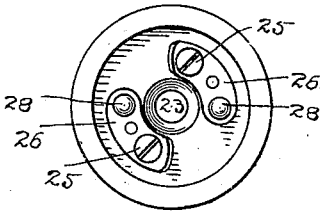

WITNESSES.

H. A. Lamb.

S. W. Atherton.

INVENTOR.

Harvey Hubbell

By A. M. Wooster

Atty.

PHOTO-LITHOGRAPHED BY SACHETT & WILHELMS LITHO. & PTG. CO. NEW YORK.