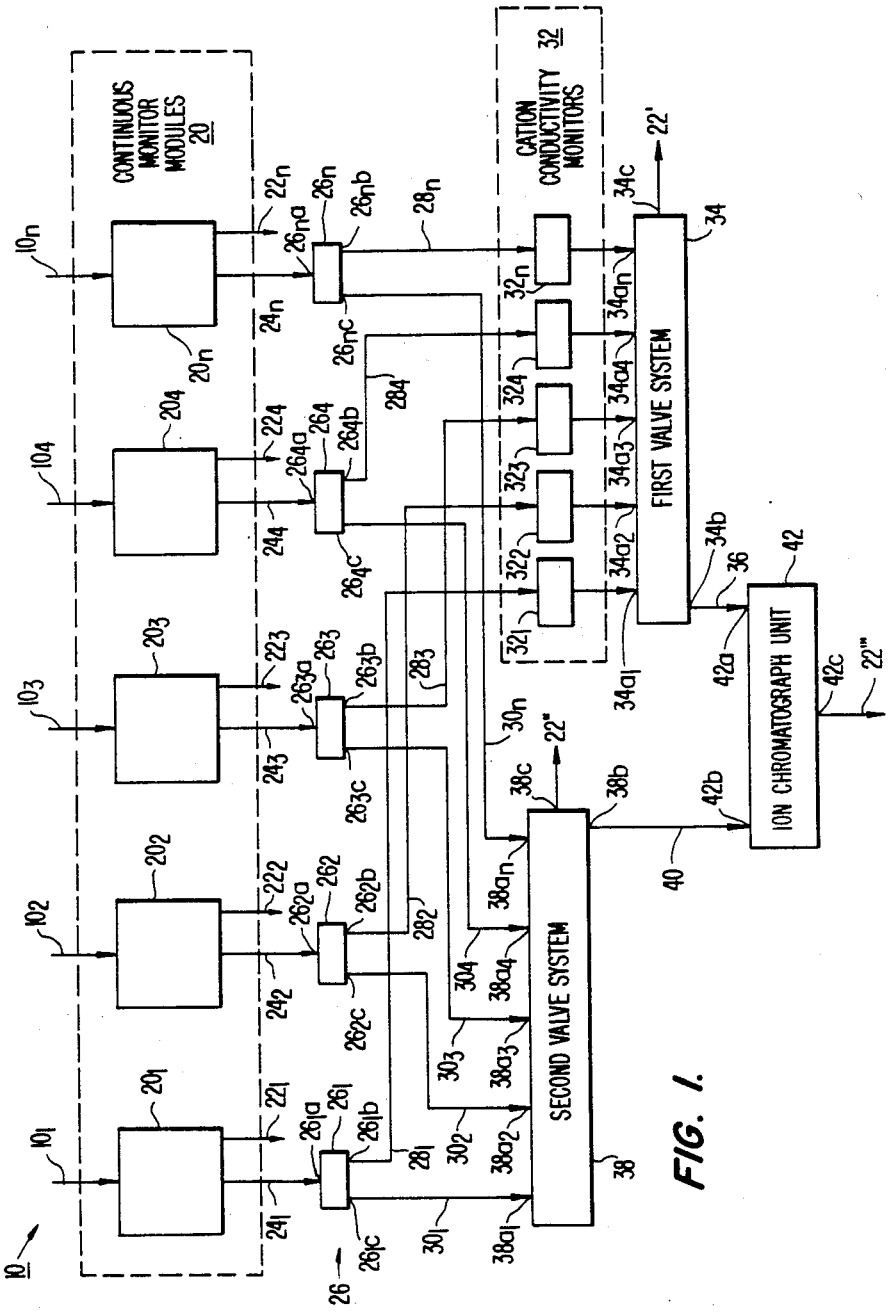
CONTINUOUS MONITOR MODULES 20
CATION CONDUCTIVITY MONITORS 32
FIRST VALVE SYSTEM
SECOND VALVE SYSTEM
ION CHROMATOGRAPH UNIT

FIG. 1.