May 29, 1934. A. LLOYD 1,960,850

WALL PAPERING MACHINE

Filed Feb. 5, 1932 2 Sheets-Sheet 1

Fig. 1.

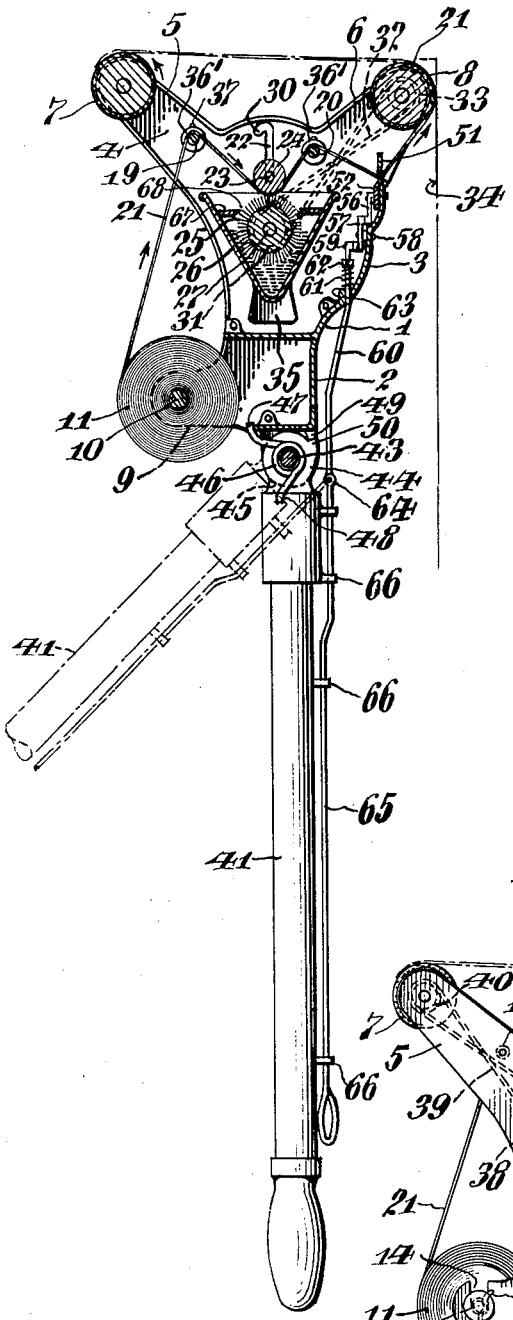

Fig. 2.

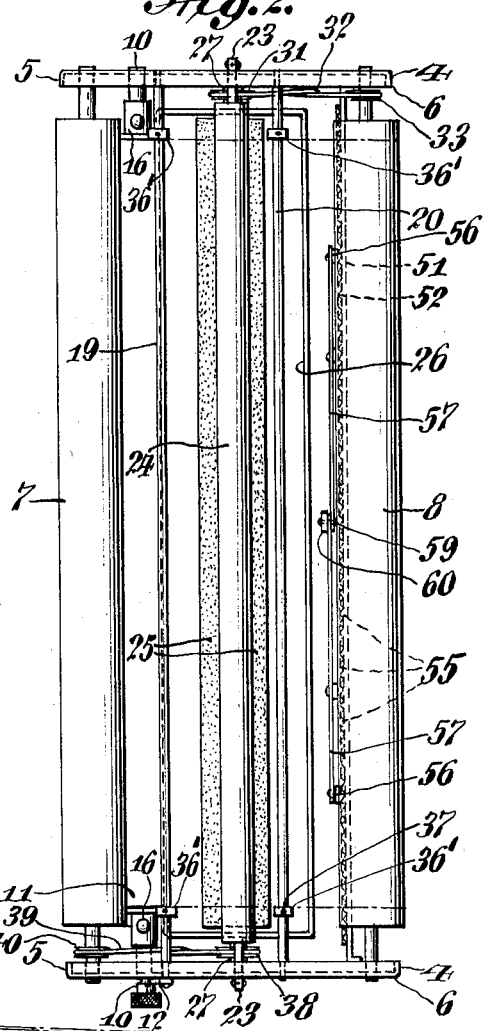

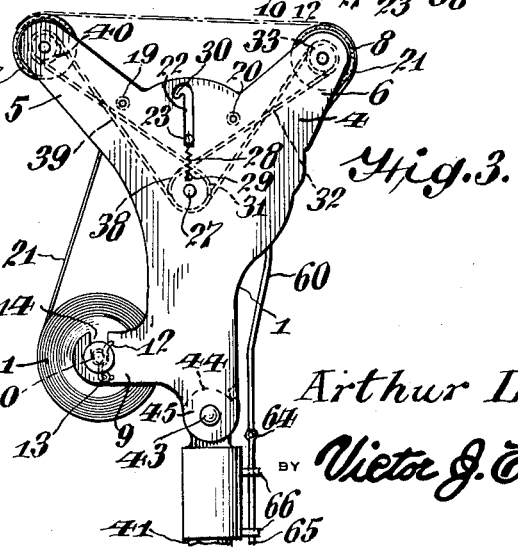

Fig. 3.

Arthur Lloyd,
INVENTOR

BY Victor J. Evansile
ATTORNEY