Nov. 15, 1960 F. HALOSKI 2,960,250

PORTABLE THERMAL FOOD CONTAINER

Filed Sept. 13, 1956 2 Sheets-Sheet 2

Fig. 2.

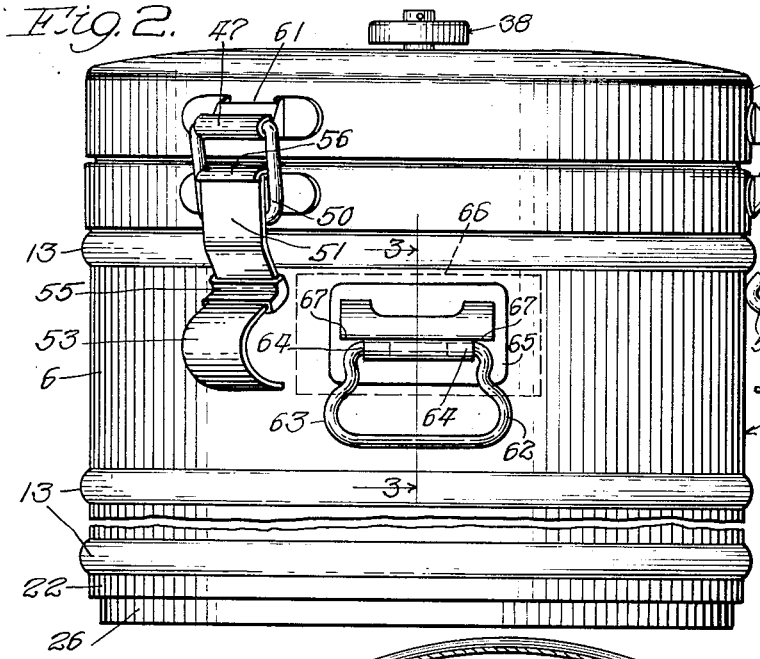

Fig. 3.

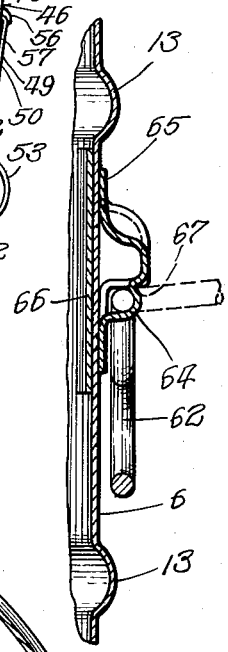

Fig. 4.

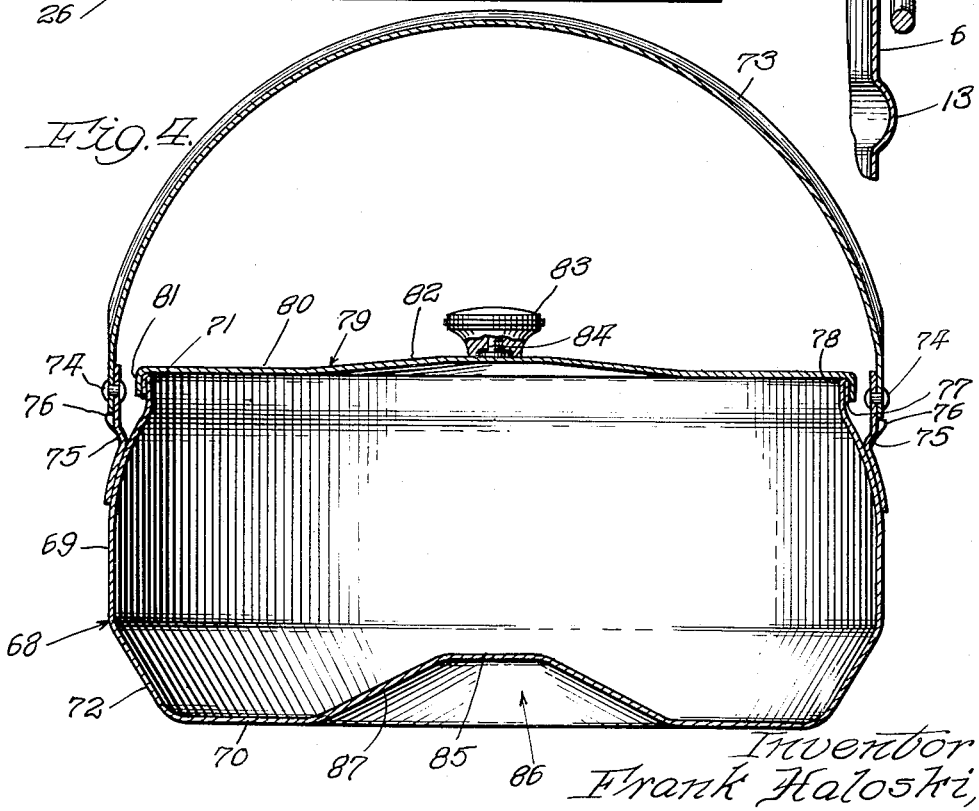

Inventor:
Frank Haloski,
By Soans, Anderson, Luedeka & Fitch
Attys.