Nov. 15, 1960 F. HALOSKI 2,960,250

PORTABLE THERMAL FOOD CONTAINER

Filed Sept. 13, 1956 2 Sheets-Sheet 1

Fig. 1.

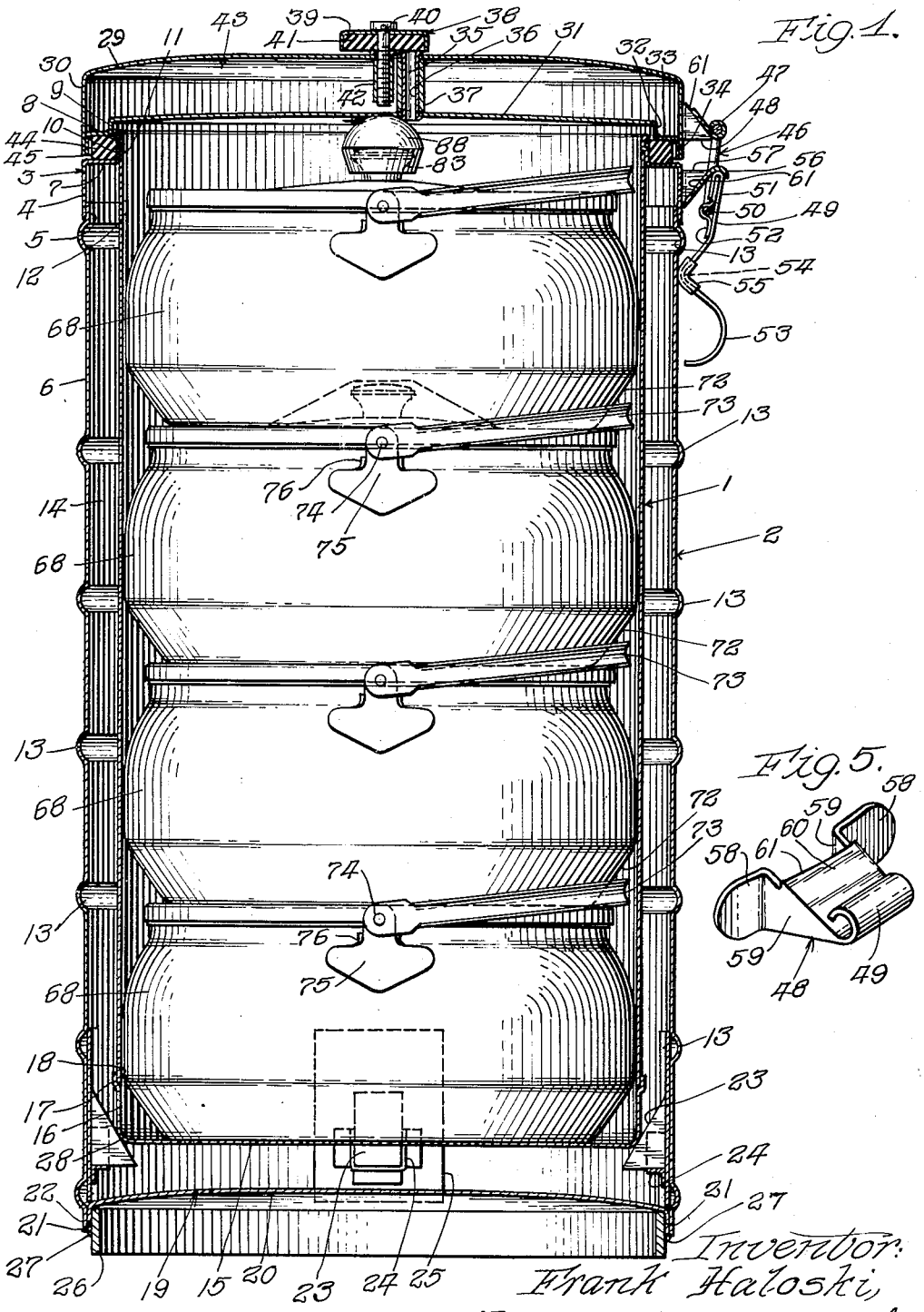

Fig. 5.

Inventor:
Frank Haloski,
By
Soans, Anderson, Luedeke + Fitch
Attys.