April 8, 1930. M. W. McARDLE ET AL 1,753,750

HAIR CLIPPER

Filed Nov. 3, 1927 2 Sheets-Sheet 1

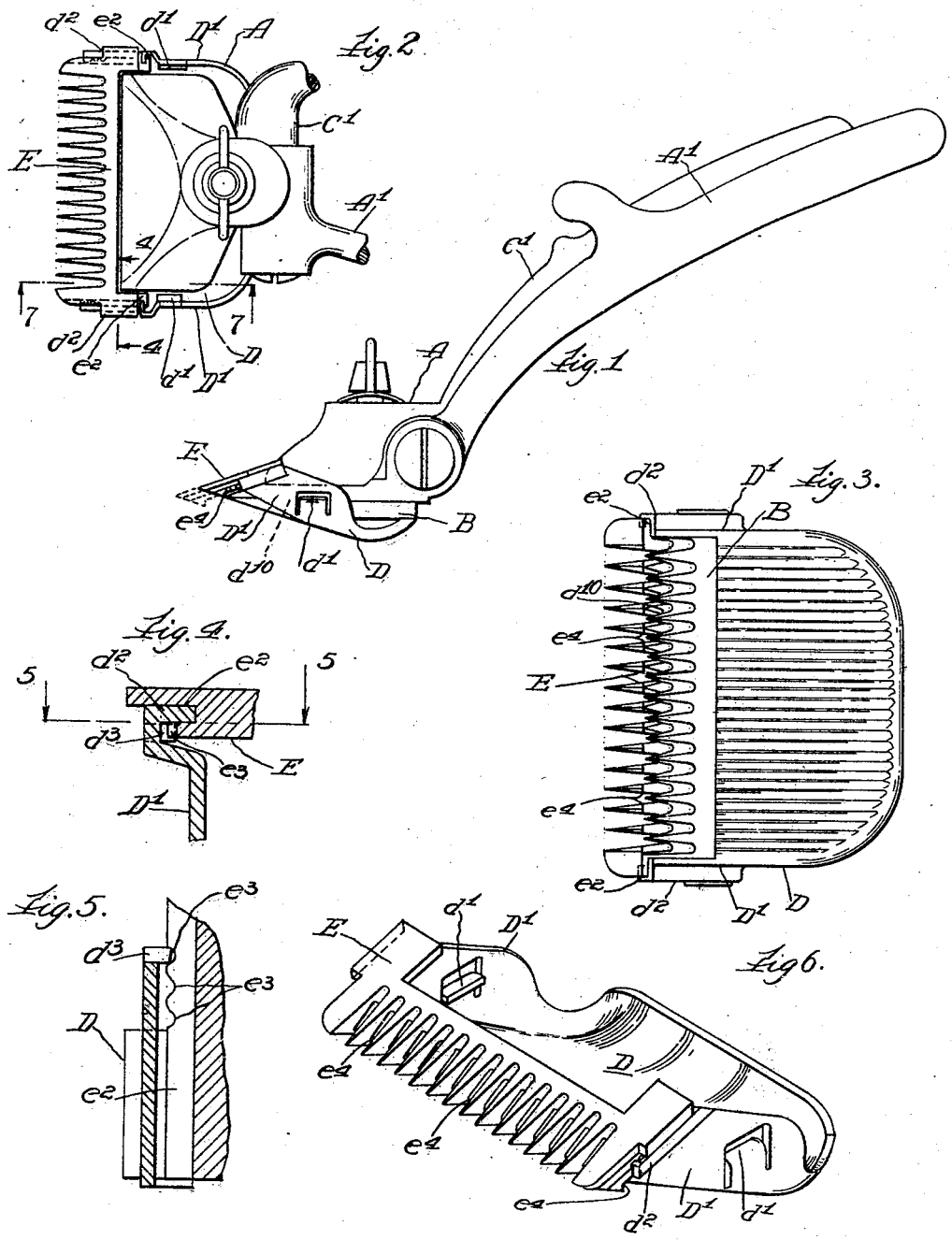

Witness
M. C. McKnight.

Inventors.
Michael W. McArdle &
John H. Donnellon.
by Burton & Burton
his Attorneys.