United States Patent

[11] 3,545,650

[72] Inventor Jimmy R. Williams
Minneapolis, Minnesota

[21] Appl. No. 771,968
[22] Filed Oct. 30, 1968
[45] Patented Dec. 8, 1970
[73] Assignee Honeywell Inc.
Minneapolis, Minnesota
a corporation of Delaware

[54] CAPACITIVE LIQUID QUANTITY INDICATING AND SHUT-OFF SYSTEM
3 Claims, 3 Drawing Figs.

[52] U.S. Cl. 222/56
[51] Int. Cl. B67d 5/08
[50] Field of Search 222/1, 55, 56

[56] References Cited
UNITED STATES PATENTS

3,162,326	12/1964	Porter	222/55
3,329,311	7/1967	Goff et al.	222/1

Primary Examiner—Samuel F. Coleman
Attorneys—Charles J. Ungemach, Ronald T. Reiling and James A. Phillips
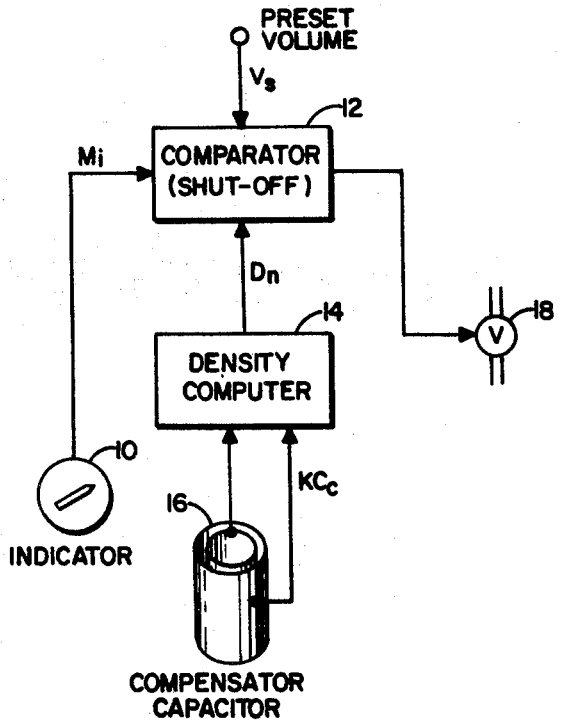
ABSTRACT: A capacitive fuel quantity indicating and shutoff system wherein a signal from a compensator capacitor in the system is used in computing the fuel density which is then multiplied by a factor corresponding to a predetermined volume. The product of density and the predetermined volume is compared to the actual mass of fuel which is indicated by the system, and a refueling valve is shut off when the actual mass exceeds the product of density and the predetermined volume.