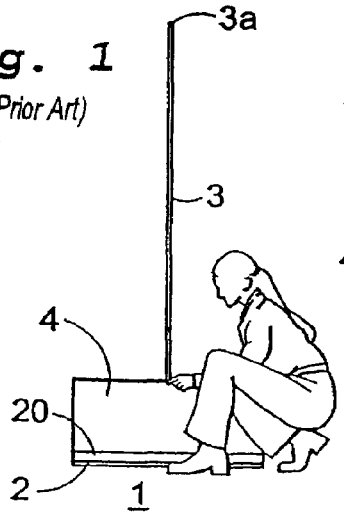

Fig. 1
(Prior Art)

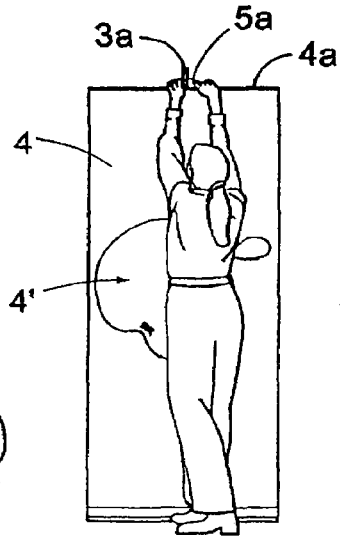

Fig. 2
(Prior Art)

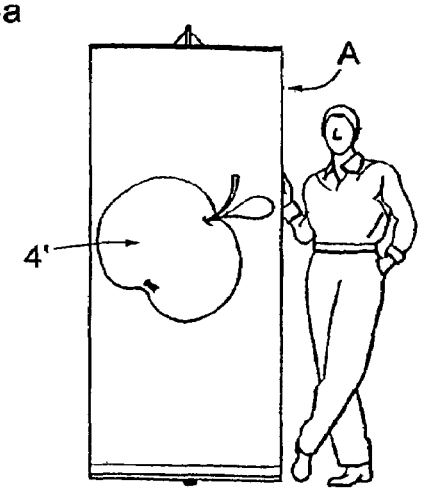

Fig. 3
(Prior Art)

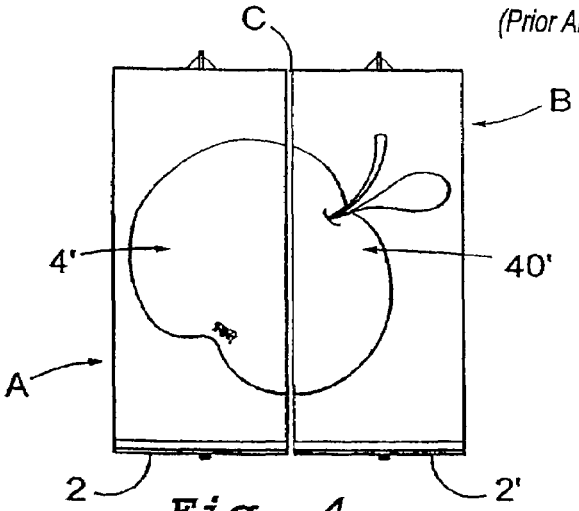

Fig. 4
(Prior Art)

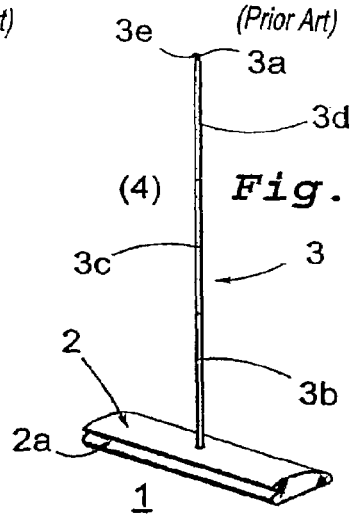

Fig. 5

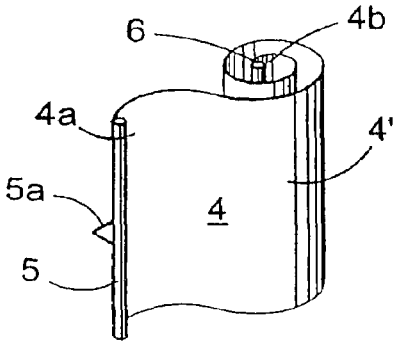

Fig. 6

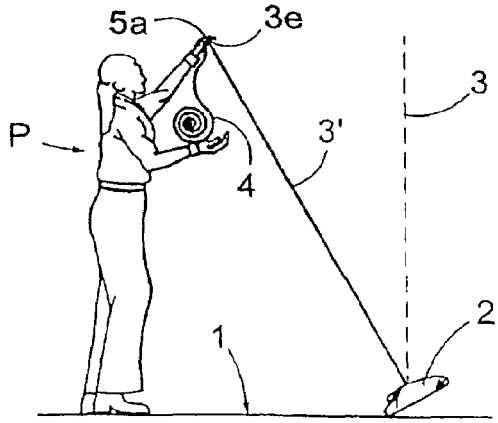

Fig. 7