US009636850B2

(12) **United States Patent**
Stopek (née Prommersberger) et al.

(10) **Patent No.: US 9,636,850 B2**
(45) **Date of Patent: May 2, 2017**

(54) **BUTTRESS AND SURGICAL STAPLING APPARATUS**

(71) Applicant: **COVIDIEN LP**, Mansfield, MA (US)

(72) Inventors: **Megan Stopek (née Prommersberger)**, St. Louis Park, MN (US); **Brian Nentwick**, Greenfield Center, NY (US); **Philippe Gravagna**, Irigny (FR); **Yves Bayon**, Lyons (FR); **Dagmar Dassonville**, Charnoz (FR); **Alfredo Meneghin**, Laval (FR); **Julie Lecuivre**, Le Bois d'Oingt (FR)

(73) Assignee: **Covidien LP**, Mansfield, MA (US)

(*) Notice: Subject to any disclaimer, the term of this patent is extended or adjusted under 35 U.S.C. 154(b) by 164 days.

(21) Appl. No.: **14/178,927**

(22) Filed: **Feb. 12, 2014**

(65) **Prior Publication Data**

US 2014/0158742 A1 Jun. 12, 2014

Related U.S. Application Data

(60) Continuation of application No. 13/945,218, filed on Jul. 18, 2013, now Pat. No. 9,005,243, which is a continuation of application No. 13/274,521, filed on Oct. 17, 2011, now Pat. No. 8,496,683, which is a division of application No. 11/823,340, filed on Jun. 27, 2007, now Pat. No. 8,062,330.

(51) **Int. Cl.**

A61B 17/04	(2006.01)
B29C 39/12	(2006.01)
A61B 17/072	(2006.01)
A61B 17/00	(2006.01)

(52) **U.S. Cl.**

CPC ***B29C 39/123*** (2013.01); ***A61B 17/072*** (2013.01); ***A61B 17/07207*** (2013.01); ***A61B 17/07292*** (2013.01); *A61B 2017/00526* (2013.01); *A61B 2017/00849* (2013.01); *A61B 2017/00889* (2013.01); *A61B 2017/00893* (2013.01)

(58) **Field of Classification Search**

CPC A61B 17/07207; A61B 17/072; A61B 17/07292; A61B 17/068; A61B 2017/07214; B29C 39/123

See application file for complete search history.

(56) **References Cited**

U.S. PATENT DOCUMENTS

3,054,406	A	9/1962	Usher
3,079,606	A	3/1963	Bobrov
3,124,136	A	3/1964	Usher

(Continued)

FOREIGN PATENT DOCUMENTS

CA	2282761 A1	9/1998
CA	2 667 434	5/2008

(Continued)

OTHER PUBLICATIONS

Extended European Search Report corresponding to EP 14 16 9739.1, completed Aug. 19, 2014 and Aug. 29, 2014; (7 pp).

(Continued)

Primary Examiner — Gregory Anderson
Assistant Examiner — Christina Lauer

(57) **ABSTRACT**

Multilayer structures including a porous layer and a non-porous layer are useful as buttresses when associated with a surgical stapling apparatus.
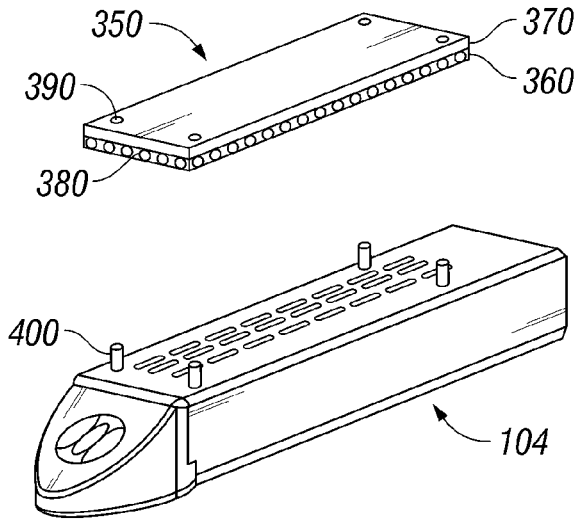
23 Claims, 5 Drawing Sheets