US009321050B2

(12) **United States Patent**
Rose et al.

(10) **Patent No.: US 9,321,050 B2**
(45) **Date of Patent: Apr. 26, 2016**

(54) **MICROFLUIDIC ULTRASONIC PARTICLE SEPARATORS WITH ENGINEERED NODE LOCATIONS AND GEOMETRIES**

(71) Applicant: **Lawrence Livermore National Security, LLC**, Livermore, CA (US)

(72) Inventors: **Klint A. Rose**, Alviso, CA (US); **Karl A. Fisher**, Brentwood, CA (US); **Douglas A. Wajda**, Urbana, IL (US); **Raymond P. Mariella, Jr.**, Danville, CA (US); **Christopher Bailey**, Oakland, CA (US); **Dietrich Dehlinger**, San Francisco, CA (US); **Maxim Shusteff**, Oakland, CA (US); **Byoungsok Jung**, Palo Alto, CA (US); **Kevin D. Ness**, Pleasanton, CA (US)

(73) Assignee: **Lawrence Livermore National Security, LLC**, Livermore, CA (US)

(*) Notice: Subject to any disclaimer, the term of this patent is extended or adjusted under 35 U.S.C. 154(b) by 0 days.

(21) Appl. No.: **14/659,825**

(22) Filed: **Mar. 17, 2015**

(65) **Prior Publication Data**

US 2015/0196911 A1 Jul. 16, 2015

Related U.S. Application Data

(62) Division of application No. 14/246,981, filed on Apr. 7, 2014, now Pat. No. 8,991,614, which is a division of application No. 13/571,640, filed on Aug. 10, 2012, now Pat. No. 8,727,129.

(60) Provisional application No. 61/524,020, filed on Aug. 16, 2011.

(51) **Int. Cl.**
B01L 3/00 (2006.01)
B01D 21/28 (2006.01)

(Continued)

(52) **U.S. Cl.**
CPC ***B01L 3/50273*** (2013.01); ***B01D 21/28*** (2013.01); ***B01D 21/283*** (2013.01);

(Continued)

(58) **Field of Classification Search**
CPC B01L 3/50273; B01L 3/502761; B01L 2200/0631; B01L 2400/0439; B01L 2200/0652; B01L 2400/0487; B01L 2300/0864; B01L 2200/0636; B01L 2300/0816; G01N 1/0477; G01N 33/491; G01N 33/48728; G01N 2001/4094; B01D 21/28; B01D 21/283; B01D 2221/10
USPC 209/454, 455, 457, 458
See application file for complete search history.

(56) **References Cited**

U.S. PATENT DOCUMENTS

6,332,541 B1 12/2001 Coakley et al.
7,674,630 B2 3/2010 Silversson

(Continued)

OTHER PUBLICATIONS

Fisher et al., "Modeling the Acoustic Radiation Force in Microfluidic Chambers (L)," J. Acoust. Soc. Am. 123 (4), 2008, pp. 1862-1864.

(Continued)

Primary Examiner — David H Bollinger
(74) *Attorney, Agent, or Firm* — Eddie E. Scott

(57) **ABSTRACT**

An ultrasonic microfluidic system includes a separation channel for conveying a sample fluid containing small particles and large particles, flowing substantially parallel, adjacent to a recovery fluid, with which it is in contact. An acoustic transducer produces an ultrasound standing wave, that generates a pressure field having at least one node of minimum pressure amplitude. An acoustic extension structure is located proximate to said separation channel for positioning said acoustic node off center in said acoustic area and concentrating the large particles in said recovery fluid stream.
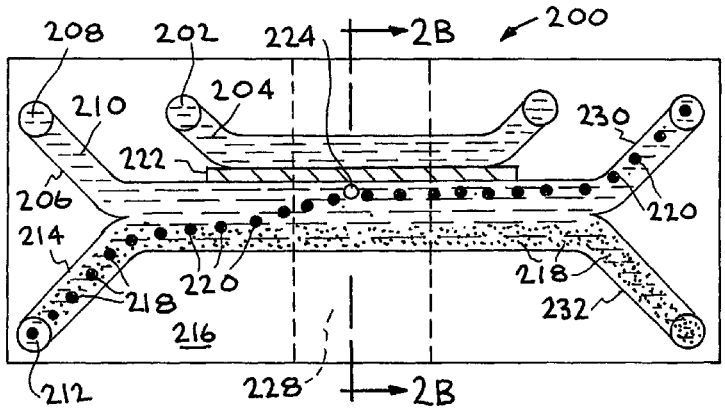
7 Claims, 5 Drawing Sheets