Nov. 2, 1965 E. A. PETERSON ETAL 3,215,450

CASINGS FOR BOOKS

Filed Feb. 18, 1964 2 Sheets-Sheet 1

FIG. 1.

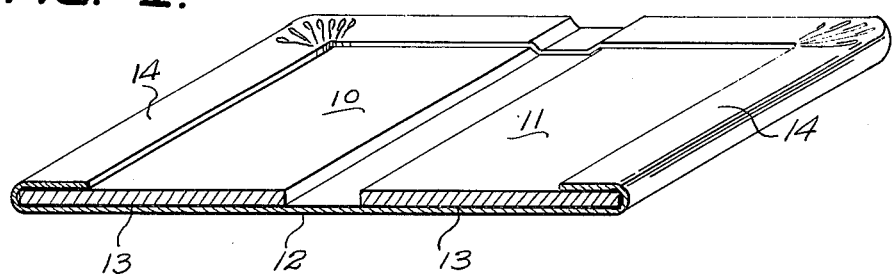

FIG. 2.

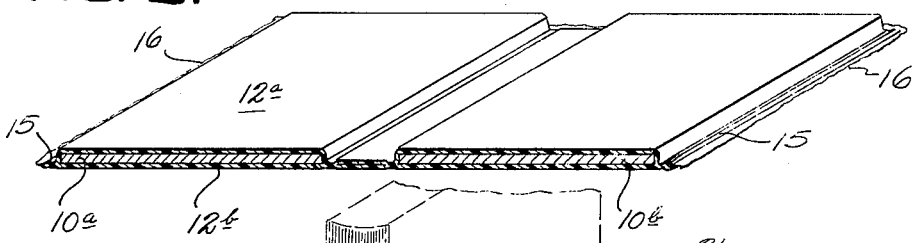

FIG. 3.

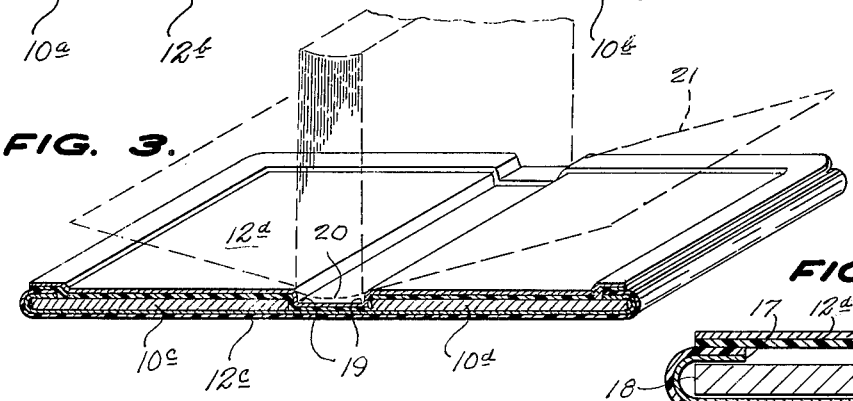

FIG. 4.

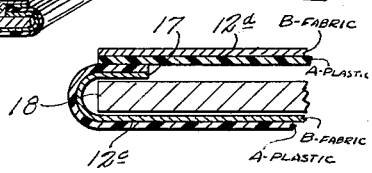

FIG. 5.

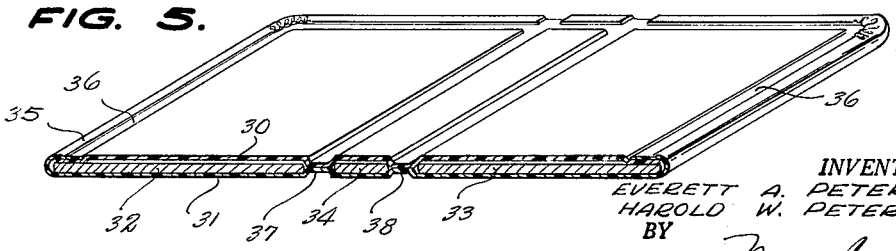

INVENTORS
EVERETT A. PETERSON,
HAROLD W. PETERSON,
BY
Max Hall
ATTORNEY.