TAPING DEVICE

Filed March 5, 1962 9 Sheets-Sheet 2

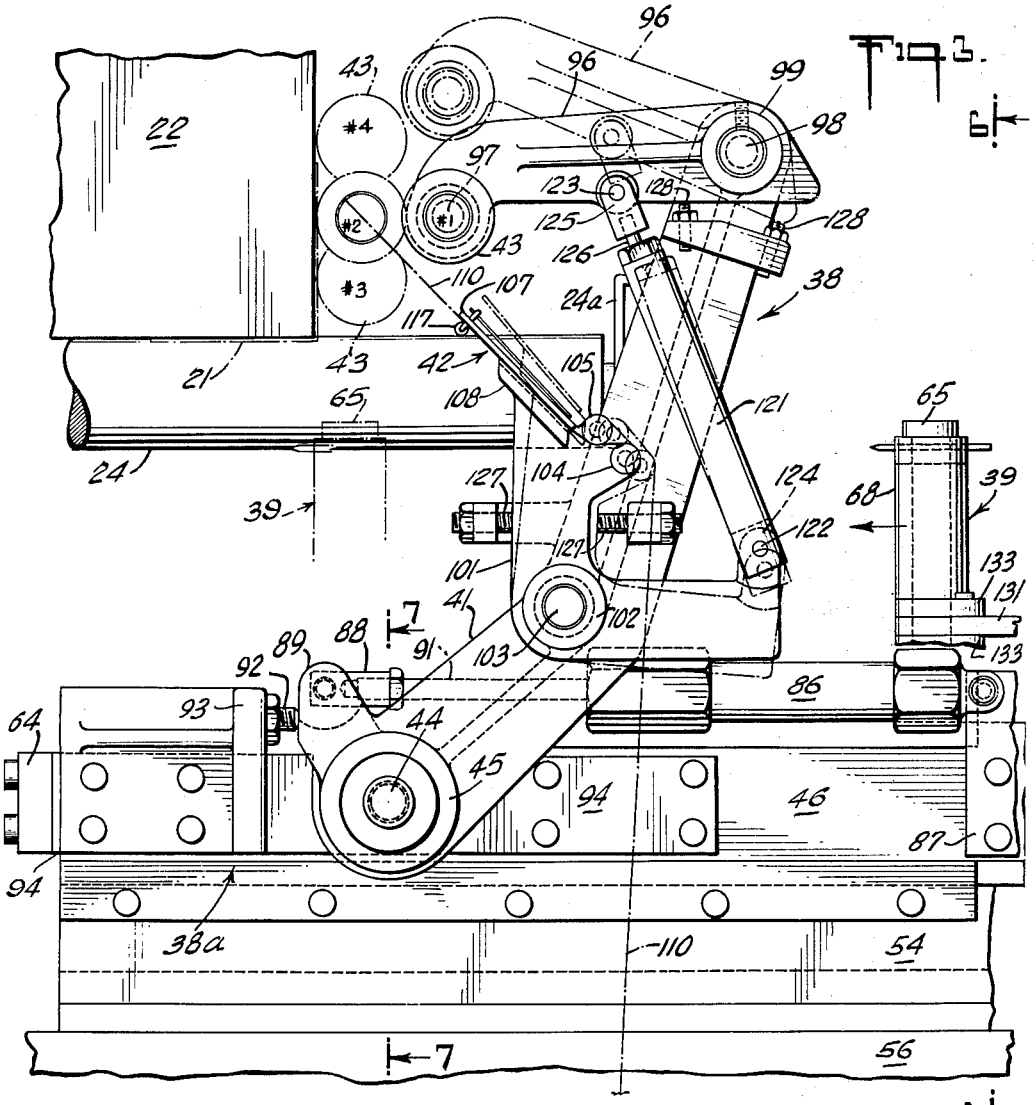

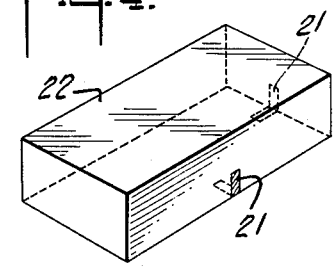

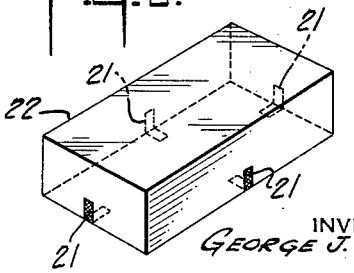

INVENTOR
GEORGE J. PHILIPPI
BY
Charles A. Harris
ATTORNEY