US009411450B2

(12) **United States Patent**
Shimizu

(10) **Patent No.: US 9,411,450 B2**
(45) **Date of Patent: Aug. 9, 2016**

(54) **DISPLAY INPUT DEVICE, IMAGE FORMING APPARATUS, AND CONTROL METHOD OF DISPLAY INPUT DEVICE**

(71) Applicant: **KYOCERA Document Solutions Inc.**, Osaka (JP)

(72) Inventor: **Takeo Shimizu**, Osaka (JP)

(73) Assignee: **KYOCERA Document Solutions Inc.**, Osaka (JP)

(*) Notice: Subject to any disclaimer, the term of this patent is extended or adjusted under 35 U.S.C. 154(b) by 21 days.

(21) Appl. No.: **14/539,655**

(22) Filed: **Nov. 12, 2014**

(65) **Prior Publication Data**

US 2015/0145793 A1 May 28, 2015

(30) **Foreign Application Priority Data**

Nov. 28, 2013 (JP) 2013-245621

(51) **Int. Cl.**

G06F 3/0488	(2013.01)
G06F 3/041	(2006.01)
G06F 3/0482	(2013.01)
G06F 3/0483	(2013.01)

(52) **U.S. Cl.**

CPC ***G06F 3/041*** (2013.01); ***G06F 3/0482*** (2013.01); ***G06F 3/0483*** (2013.01); ***G06F 3/0488*** (2013.01); ***G06F 3/04886*** (2013.01)

(58) **Field of Classification Search**

CPC ... G06F 3/0482; G06F 3/041; G06F 3/04886; G06F 3/0483

See application file for complete search history.

(56) **References Cited**

U.S. PATENT DOCUMENTS

8,532,596	B1	9/2013	Park	455/158.4
2008/0184171	A1	7/2008	Sato et al.	715/841
2010/0178909	A1*	7/2010	Kim	G06F 3/04817 455/418
2011/0030050	A1	2/2011	Fukushima et al.	726/16
2011/0050601	A1*	3/2011	Son	G06F 3/04883 345/173
2012/0233573	A1	9/2012	Sullivan et al.	715/848
2013/0154968	A1*	6/2013	Tomimori	G06F 1/1616 345/173
2013/0194378	A1	8/2013	Brown	348/14.09

FOREIGN PATENT DOCUMENTS

EP	2 662 761	A1	11/2013
JP	10-105356	A	4/1998
JP	2002-312105	A	10/2002
JP	2013-131114	A	7/2013

* cited by examiner

Primary Examiner — Shaheda Abdin
(74) *Attorney, Agent, or Firm* — Stein IP, LLC

(57) **ABSTRACT**

A display input device includes a display unit, a touch panel unit for accepting an operation on a button displayed on the display unit. When the touch panel unit accepts a predetermined first operation, the display unit performs a list display of a predetermined or smaller number of reduced screens in order from the higher layer screen, each of which is smaller than a screen in the normal mode and is selected so as to move toward a lower layer one by one from a next lower layer screen of the screen on which the first operation is made.
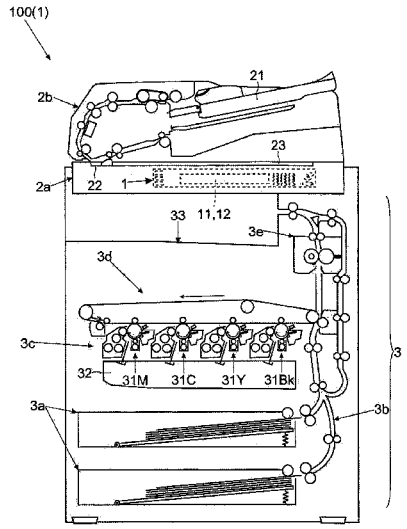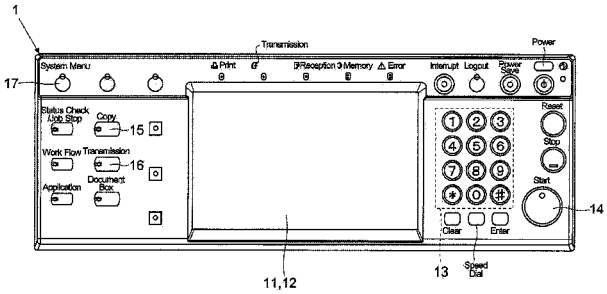
12 Claims, 14 Drawing Sheets