US009411350B1

(12) **United States Patent**
Yem

(10) **Patent No.: US 9,411,350 B1**
(45) **Date of Patent: Aug. 9, 2016**

(54) **VOLTAGE CONVERSION APPARATUS AND POWER-ON RESET CIRCUIT AND CONTROL METHOD THEREOF**

(71) Applicant: **Poh-Weng Yem**, Penang (MY)

(72) Inventor: **Poh-Weng Yem**, Penang (MY)

(73) Assignee: **PIXART IMAGING (PENANG) SDN. BHD.**, Penang (MY)

(*) Notice: Subject to any disclaimer, the term of this patent is extended or adjusted under 35 U.S.C. 154(b) by 3 days.

(21) Appl. No.: **14/615,223**

(22) Filed: **Feb. 5, 2015**

(51) **Int. Cl.**
G05F 1/56 (2006.01)
G05F 1/575 (2006.01)

(52) **U.S. Cl.**
CPC ***G05F 1/575*** (2013.01)

(58) **Field of Classification Search**
CPC G05F 1/56; G05F 1/565; G05F 1/575; H02M 3/156–3/158; H02M 3/1584; H02M 3/1588
USPC 323/270–285
See application file for complete search history.

(56) **References Cited**

U.S. PATENT DOCUMENTS

7,728,573 B2 * 6/2010 Capilla H02M 3/1588 323/271
9,035,636 B2 * 5/2015 Colbeck H02M 7/066 323/282
2010/0148741 A1 * 6/2010 Chen H02M 3/158 323/285

* cited by examiner

Primary Examiner — Yemane Mehari
(74) *Attorney, Agent, or Firm* — Tung & Associates

(57) **ABSTRACT**

The present invention discloses a voltage conversion apparatus and a power-ON reset (POR) circuit and a control method thereof. The voltage conversion apparatus includes: a conversion circuit, an input status detection circuit, an output status detection circuit, a status feedback circuit, and a POR circuit. The POR circuit generates a POR signal according to an input status signal, an output status signal, and a feedback signal, to indicate whether a POR procedure is completed. The POR circuit includes: a logic circuit, for generating a reset signal indicating whether both the input and output voltages are ready; and a delay circuit, for generating the POR signal by delaying a predetermined time period according to the reset signal and a feedback signal related to the POR signal.
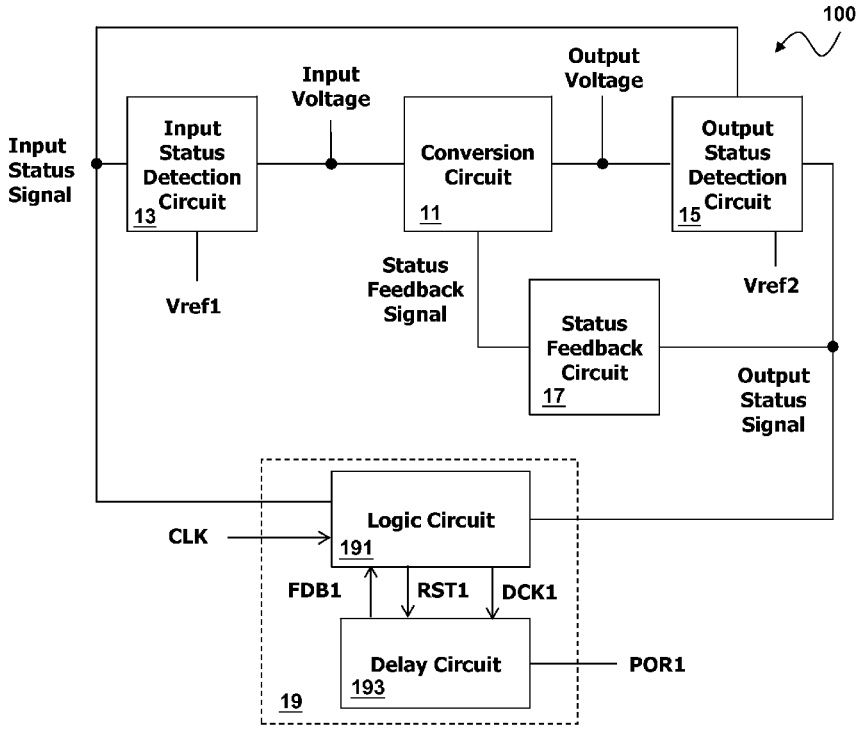
19 Claims, 6 Drawing Sheets