US009410850B2

(12) **United States Patent**
Novotny et al.

(10) **Patent No.: US 9,410,850 B2**
(45) **Date of Patent: Aug. 9, 2016**

(54) **INFRARED IMAGER READOUT ELECTRONICS**

(71) Applicants: **Vlad Joseph Novotny**, Los Gatos, CA (US); **Howard Woo**, San Jose, CA (US)

(72) Inventors: **Vlad Joseph Novotny**, Los Gatos, CA (US); **Howard Woo**, San Jose, CA (US)

(*) Notice: Subject to any disclaimer, the term of this patent is extended or adjusted under 35 U.S.C. 154(b) by 224 days.

(21) Appl. No.: **14/032,205**

(22) Filed: **Sep. 20, 2013**

(65) **Prior Publication Data**

US 2015/0085134 A1 Mar. 26, 2015

(51) **Int. Cl.**

G01J 5/24	(2006.01)
H04N 5/33	(2006.01)
H04N 5/3745	(2011.01)
H04N 5/378	(2011.01)
H04N 5/353	(2011.01)
H04N 5/355	(2011.01)
H04N 5/357	(2011.01)

(52) **U.S. Cl.**

CPC ... ***G01J 5/24*** (2013.01); ***H04N 5/33*** (2013.01); ***H04N 5/3535*** (2013.01); ***H04N 5/3575*** (2013.01); ***H04N 5/35554*** (2013.01); ***H04N 5/378*** (2013.01); ***H04N 5/37455*** (2013.01)

(58) **Field of Classification Search**

CPC G01J 5/24; H04N 5/33; H04N 5/353; H04N 5/3535; H04N 5/357; H04N 5/37455; H04N 5/378

See application file for complete search history.

(56) **References Cited**

U.S. PATENT DOCUMENTS

6,188,069	B1 *	2/2001	Endoh	G01J 5/20 250/332
6,541,751	B1 *	4/2003	Bidermann	250/208.1
2007/0075888	A1 *	4/2007	Kelly	H03M 1/145 341/155
2007/0170359	A1 *	7/2007	Syllaios et al.	250/338.1
2008/0252730	A1 *	10/2008	Hong	G08B 13/19 348/155
2008/0284890	A1 *	11/2008	Miyatake	H04N 3/155 348/308
2009/0121139	A1 *	5/2009	Chamming's	G01J 5/22 250/340
2009/0200466	A1 *	8/2009	Mammen	G06T 5/50 250/330
2010/0238332	A1 *	9/2010	Watanabe	348/300
2011/0210251	A1 *	9/2011	Onakado	H04N 5/33 250/332
2011/0242378	A1 *	10/2011	Mabuchi	348/296
2012/0318984	A1 *	12/2012	Vanneau	G01J 5/00 250/340

* cited by examiner

Primary Examiner — David Porta
Assistant Examiner — Jeremy S Valentiner

(57) **ABSTRACT**

Readout integrated circuits placed underneath the suspended sensing elements detect changes of electrical resistance of sensing elements and digitize the signals with digital to analog convertor for each element. Readout electronics provides low parasitics, high signal to noise ratio, high data rate, high dynamic range and instantaneous global readout.
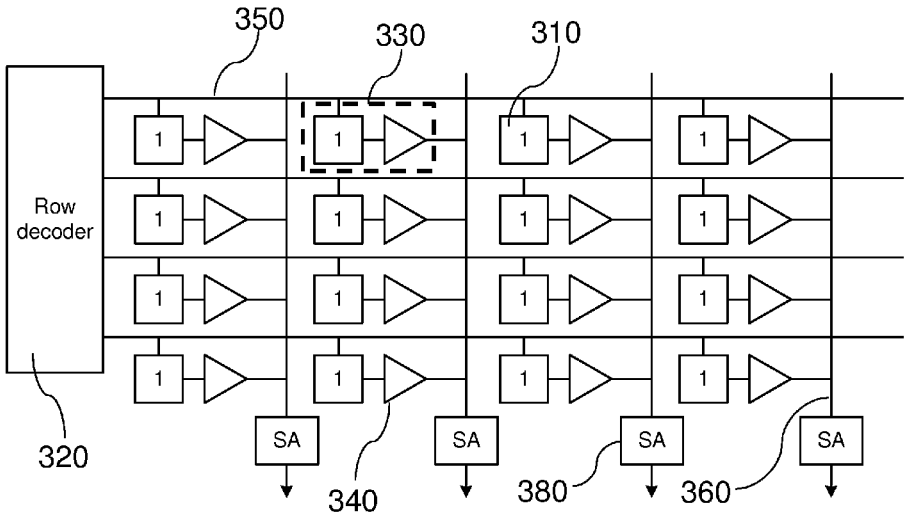
20 Claims, 8 Drawing Sheets