US009409750B2

(12) **United States Patent**
Smith et al.

(10) **Patent No.: US 9,409,750 B2**
(45) **Date of Patent: Aug. 9, 2016**

(54) **REMOVABLE VEHICLE TOP LIFT SYSTEM**

(71) Applicant: **Lange Originals, LLC**, Salt Lake City, UT (US)

(72) Inventors: **Carter Smith**, Salt Lake City, UT (US); **Kerby Smith**, Salt Lake City, UT (US); **Tobin Gunderson**, Salt Lake City, UT (US)

(73) Assignee: **Lange Originals, LLC**, Salt Lake City, UT (US)

(*) Notice: Subject to any disclaimer, the term of this patent is extended or adjusted under 35 U.S.C. 154(b) by 34 days.

(21) Appl. No.: **14/177,141**

(22) Filed: **Feb. 10, 2014**

(65) **Prior Publication Data**

US 2015/0225214 A1 Aug. 13, 2015

(51) **Int. Cl.**

B66C 1/00	(2006.01)
B66C 1/28	(2006.01)
B60J 7/16	(2006.01)

(52) **U.S. Cl.**

CPC . ***B66C 1/28*** (2013.01); *B60J 7/1607* (2013.01)

(58) **Field of Classification Search**

CPC B66F 7/26; B66C 1/28
USPC 294/67.22, 67.33, 74, 67.1, 67.21, 67.5, 294/81.3, 81.5; 254/47, 338; 414/543, 462, 414/626

See application file for complete search history.

(56) **References Cited**

U.S. PATENT DOCUMENTS

1,512,149	A	*	10/1924	Wagner	294/82.11
4,248,469	A	*	2/1981	Knox	294/82.12
4,576,542	A		3/1986	Brasell	
4,899,985	A	*	2/1990	Good	254/8 B
5,081,775	A	*	1/1992	Veilleux	37/197
5,782,459	A	*	7/1998	Klann	254/323
6,152,427	A		11/2000	Hoslett	
6,357,810	B1	*	3/2002	Schwulst	294/81.3
7,004,697	B2	*	2/2006	Alaweih	410/68
7,568,678	B2		8/2009	Hammond	
8,556,311	B1	*	10/2013	Lucero	294/67.33
8,641,355	B2	*	2/2014	Pawlak	414/462
9,016,741	B1	*	4/2015	Thoreson et al.	294/67.1
2006/0261320	A1	*	11/2006	Crawford	254/134
2007/0163982	A1	*	7/2007	Lichinchi	212/175
2009/0309079	A1		12/2009	Lacina	
2013/0280020	A1	*	10/2013	O'Brien et al.	414/543

FOREIGN PATENT DOCUMENTS

WO 2007130062 11/2007

OTHER PUBLICATIONS

Installation Instruction/Hoist-a-Top 2 Door JK.
Installation Instruction/Hoist-a-Top 4 Door JK.

* cited by examiner

Primary Examiner — Paul T Chin
(74) *Attorney, Agent, or Firm* — Maschoff Brennan

(57) **ABSTRACT**

A removable vehicle top lift system is disclosed herein. Described embodiments of a removable vehicle top lift system include a T-shaped body includes adjustable left, right, and rear arms that may be adjusted to accommodate the size of different removable vehicle tops. The left, right, and rear arms also include hooks for engaging a removable vehicle top. Balancing mechanisms for a removable vehicle top lift system are disclosed. Hooks with mechanisms to hold down a window of a removable vehicle top are also disclosed.
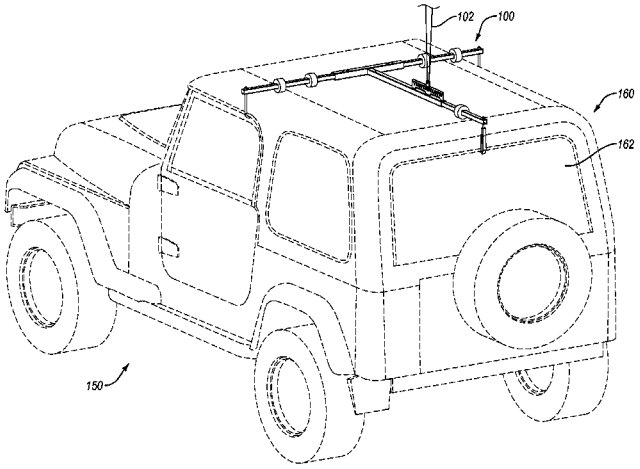
17 Claims, 17 Drawing Sheets