US009409050B2

(12) **United States Patent**
Mintz

(10) **Patent No.: US 9,409,050 B2**
(45) **Date of Patent: Aug. 9, 2016**

(54) **COMBINED EXERCISE APPARATUS**

(71) Applicant: **Hagay Mintz**, Kiryat Ata (IL)
(72) Inventor: **Hagay Mintz**, Kiryat Ata (IL)

(*) Notice: Subject to any disclaimer, the term of this patent is extended or adjusted under 35 U.S.C. 154(b) by 0 days.
(21) Appl. No.: **14/629,504**
(22) Filed: **Feb. 24, 2015**
(65) **Prior Publication Data**
US 2015/0238806 A1 Aug. 27, 2015
(30) **Foreign Application Priority Data**
Feb. 24, 2014 (IL) 231105
(51) **Int. Cl.**
A63B 22/02 (2006.01)
A63B 21/06 (2006.01)
A63B 21/015 (2006.01)
A63B 23/035 (2006.01)
A63B 69/00 (2006.01)
(52) **U.S. Cl.**
CPC ***A63B 22/02*** (2013.01); ***A63B 21/015*** (2013.01); ***A63B 21/0615*** (2013.01); ***A63B 23/0355*** (2013.01); ***A63B 23/03525*** (2013.01); ***A63B 23/03541*** (2013.01); ***A63B 23/03575*** (2013.01); ***A63B 23/03591*** (2013.01); *A63B 2069/0033* (2013.01); *A63B 2225/09* (2013.01); *Y10T 29/49826* (2015.01)
(58) **Field of Classification Search**
USPC 482/1–148
See application file for complete search history.

(56) **References Cited**

U.S. PATENT DOCUMENTS

5,679,100 A * 10/1997 Charnitski A63B 22/001 482/37
5,803,874 A * 9/1998 Wilkinson A63B 22/0012 482/51
5,951,449 A 9/1999 Oppriecht
6,450,923 B1 * 9/2002 Vatti A63B 21/00181 482/51
7,775,943 B2 * 8/2010 Vittone A63B 21/0552 482/121
7,785,242 B2 * 8/2010 Solomon A61H 1/0229 482/121
8,007,409 B2 * 8/2011 Ellis A63B 21/0615 482/54
8,147,386 B2 * 4/2012 Farnsworth A63B 23/1209 482/121
8,172,729 B2 * 5/2012 Ellis A63B 21/4047 482/54
8,241,187 B2 8/2012 Moon et al.
8,454,479 B2 * 6/2013 Ellis A63B 21/0615 482/54
2005/0255971 A1 * 11/2005 Solomon A61H 1/0229 482/54
2006/0128532 A1 * 6/2006 Wang A63B 21/0083 482/54
2011/0082011 A1 * 4/2011 Ellis A63B 21/0615 482/54
2011/0118090 A1 * 5/2011 Ellis A63B 21/4047 482/54
2011/0312474 A1 * 12/2011 Ellis A63B 21/0615 482/54
2014/0038792 A1 * 2/2014 Farnsworth A63B 22/0012 482/112
2015/0352396 A1 * 12/2015 Dalebout A63B 22/02 482/54
2016/0001118 A1 * 1/2016 Kuehne A63B 69/0064 482/54

* cited by examiner

Primary Examiner — Stephen Crow
(74) *Attorney, Agent, or Firm* — Mark David Torche; Patwrite LLC

(57) **ABSTRACT**

A treadmill assembly, respective kit-of-parts and method of assembling combined exercise apparatus are described. The treadmill assembly includes a couple of vertical struts, a couple of support tabs including a fastener affixable to the vertical struts, at least one structural element configured to sustain rotation relatively to the support tabs, a couple of add-on members including a driven subpart and a weight loading subpart.
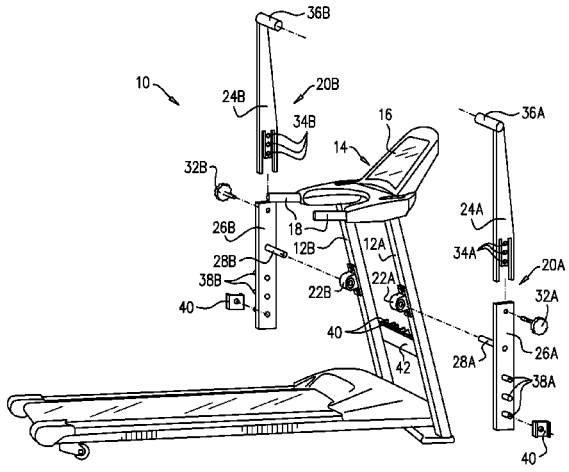
18 Claims, 4 Drawing Sheets