March 5, 1963 R. G. RYSER 3,079,749

ALARM-WATCH

Filed April 12, 1960 3 Sheets-Sheet 1

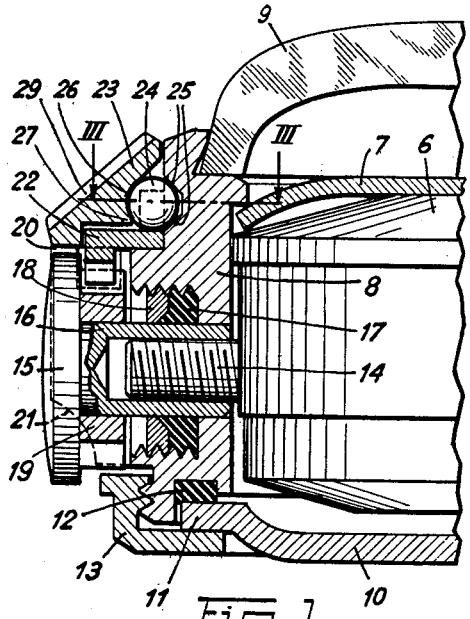

Fig. 1

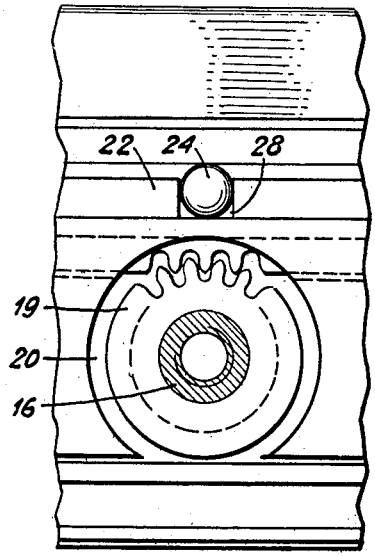

Fig. 2

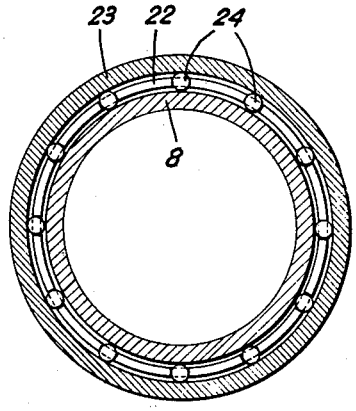

Fig. 3

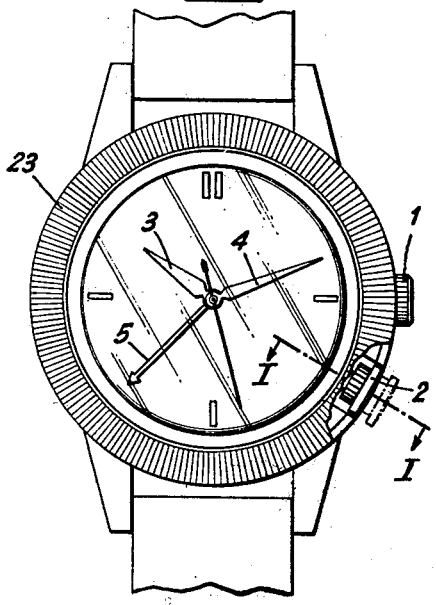

Fig. 4

Inventor
Raymond Gilbert Ryser
By Stevens Davis Miller & Mosher
Attorneys