US007179249B2

(12) **United States Patent**
Steward et al.

(10) **Patent No.: US 7,179,249 B2**
(45) **Date of Patent: Feb. 20, 2007**

(54) **DIRECTIONAL NEEDLE INJECTION DRUG DELIVERY DEVICE AND METHOD OF USE**

(75) Inventors: **Jeffrey Steward**, Lakewood, CO (US); **Mina Chow**, Campbell, CA (US)

(73) Assignee: **Advanced Cardiovascular Systems, Inc.**, Santa Clara, CA (US)

(*) Notice: Subject to any disclaimer, the term of this patent is extended or adjusted under 35 U.S.C. 154(b) by 677 days.

(21) Appl. No.: **10/390,942**

(22) Filed: **Mar. 17, 2003**

(65) **Prior Publication Data**

US 2003/0233065 A1 Dec. 18, 2003

Related U.S. Application Data

(62) Division of application No. 09/697,571, filed on Oct. 26, 2000, now Pat. No. 6,554,801.

(51) **Int. Cl.**
A61M 31/00 (2006.01)

(52) **U.S. Cl.** **604/500**; 604/506; 604/509

(58) **Field of Classification Search** 604/500, 604/506–509, 264, 523, 529; 128/898; 600/459–467, 600/424, 439, 470
See application file for complete search history.

(56) **References Cited**

U.S. PATENT DOCUMENTS

4,375,818 A * 3/1983 Suwaki et al. 600/463
5,178,150 A * 1/1993 Silverstein et al. 600/463
5,190,046 A * 3/1993 Shturman 600/463
5,331,947 A * 7/1994 Shturman 600/115
5,443,457 A * 8/1995 Ginn et al. 604/528
5,464,395 A 11/1995 Faxon et al. 604/96
5,474,075 A * 12/1995 Goldberg et al. 600/463
5,499,630 A * 3/1996 Hiki et al. 600/461
5,713,363 A * 2/1998 Seward et al. 600/437
5,957,849 A * 9/1999 Munro 600/459
5,997,497 A * 12/1999 Nita et al. 604/22
6,056,744 A * 5/2000 Edwards 606/41
6,102,867 A * 8/2000 Dietz et al. 600/461
6,186,947 B1 * 2/2001 Ouchi 600/439
6,238,336 B1 * 5/2001 Ouchi 600/160
6,283,951 B1 * 9/2001 Flaherty et al. 604/529
6,306,097 B1 * 10/2001 Park et al. 600/466
6,660,024 B1 12/2003 Flaherty et al.

* cited by examiner

Primary Examiner—LoAn H. Thanh
(74) *Attorney, Agent, or Firm*—Blakely, Sokoloff, Taylor & Zafman LLP

(57) **ABSTRACT**

The invention relates to an apparatus and method for imaging and mapping various structures located at a target area within a patient's lumen using conventional IVUS technology. The mapped images are used to accurately determine and control the location of the device within the lumen relative to the target area and/or target site. Once the drug delivery device is properly positioned within the lumen, additional ultrasonic images are generated and used to control the position and depth of penetration of a retractable needle of the device. Needle position can be precisely determined, both in relationship to the device as well as the target site for drug delivery. This allows accurate delivery of drug to the target site and, thus, enhanced treatment capabilities.
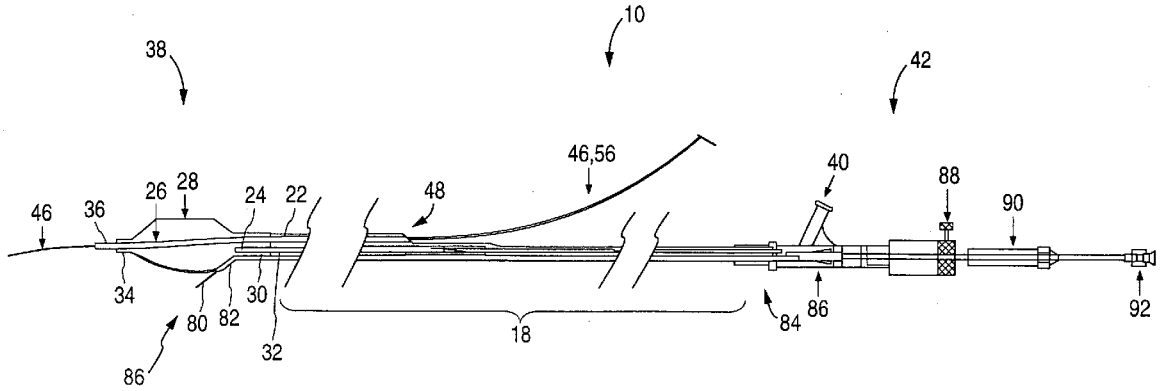
7 Claims, 8 Drawing Sheets