April 11, 1961 H. L. SEEGER 2,978,949

PHOTOGRAPHIC FLASH METER

Filed Aug. 9, 1956 2 Sheets-Sheet 1

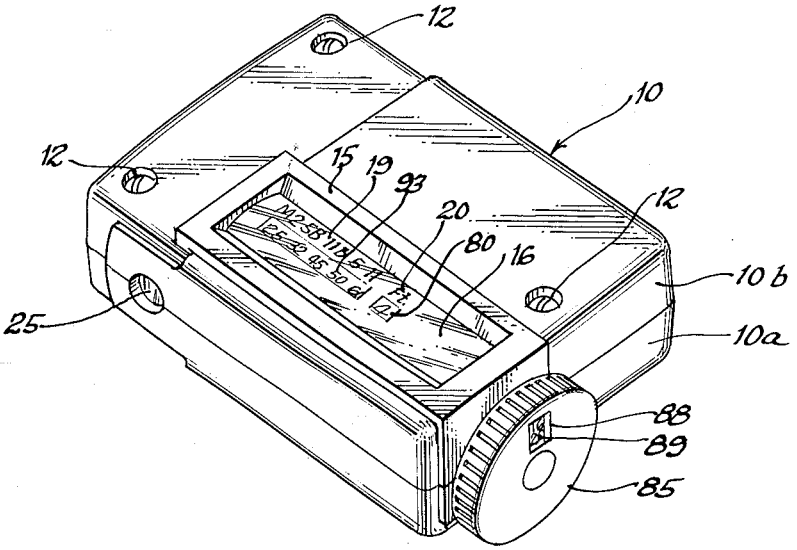

FIG. 1

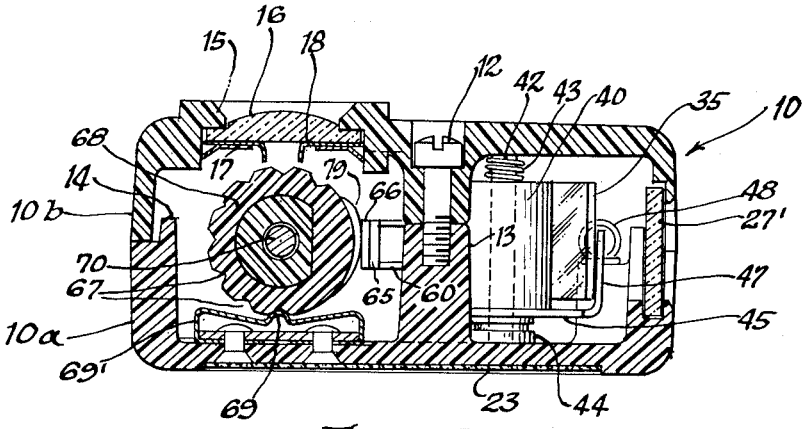

FIG. 3

INVENTOR.
Homer L. Seeger
BY Frank H. Marks
Nathan N. Kraus
Attorneys