US008773849B2

(12) **United States Patent**
Bohn et al.

(10) **Patent No.: US 8,773,849 B2**
(45) **Date of Patent: Jul. 8, 2014**

(54) **EXTENDABLE CONNECTING LINK**

(75) Inventors: **David D. Bohn**, Fort Collins, CO (US); **Paul M. O'Brien**, Sammamish, WA (US)

(73) Assignee: **Microsoft Corporation**, Redmond, WA (US)

(*) Notice: Subject to any disclaimer, the term of this patent is extended or adjusted under 35 U.S.C. 154(b) by 0 days.

(21) Appl. No.: **13/084,284**

(22) Filed: **Apr. 11, 2011**

(65) **Prior Publication Data**

US 2012/0257368 A1 Oct. 11, 2012

(51) **Int. Cl.**

H05K 7/02	(2006.01)
H05K 7/04	(2006.01)
G06F 1/16	(2006.01)
H05K 5/00	(2006.01)
H05K 7/00	(2006.01)
H04M 1/00	(2006.01)

(52) **U.S. Cl.**

USPC **361/679.28**; 361/809; 361/679.27; 455/575.1; 455/575.3; 455/575.4

(58) **Field of Classification Search**

USPC 361/809, 679.27, 679.28; 455/575.3, 455/575.4, 575.1

See application file for complete search history.

(56) **References Cited**

U.S. PATENT DOCUMENTS

4,050,116	A	9/1977	Salice
4,949,426	A	8/1990	Komaki
5,052,078	A	10/1991	Hosoi
5,077,551	A	12/1991	Saitou
5,268,816	A	12/1993	Abell, Jr. et al.
5,335,142	A	8/1994	Anderson
5,390,075	A	2/1995	English et al.
5,394,297	A	2/1995	Toedter
5,581,440	A	12/1996	Toedter
5,661,797	A	8/1997	Leman et al.
5,827,082	A	10/1998	Laine
6,108,868	A	8/2000	Lin
6,223,393	B1	5/2001	Knopf
6,230,365	B1	5/2001	Lu
6,252,767	B1	6/2001	Carlson
6,359,776	B2	3/2002	Carlson

(Continued)

FOREIGN PATENT DOCUMENTS

JP	06310874	11/1994

OTHER PUBLICATIONS

"Fpc (Mobile Phone Flex Cable)", Retrieved from: <http://richli.en.made-in-china.com/product/FeBEzQgvHJic/China-Fpc-Mobile-Phone-Flex-Cable-.html>on Oct. 11, 2010, (2010),1 page.

(Continued)

Primary Examiner — Anthony Haughton
Assistant Examiner — Zhengfu Feng
(74) *Attorney, Agent, or Firm* — Judy Yee; Micky Minhas

(57) **ABSTRACT**

In embodiments of an extendable connecting link, a first link section attaches in a first housing part of a device and a second link section attaches in a second housing part of the device. The first and second link sections interlock and slide-engage relative to each other. An interconnection channel routes an electrical interconnection between the first housing part and the second housing part of the device, where the interconnection channel is formed when the first and second link sections are slide-engaged. The first and second link sections also slide relative to each other to increase or decrease a length of the extendable connecting link.
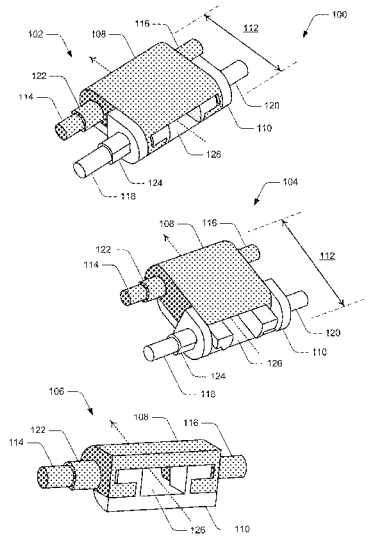
20 Claims, 8 Drawing Sheets