J. E. BOETTCHER.

MEASURING APPARATUS.

APPLICATION FILED DEC. 29, 1919.

1,373,049. Patented Mar. 29, 1921.

Fig. 1.

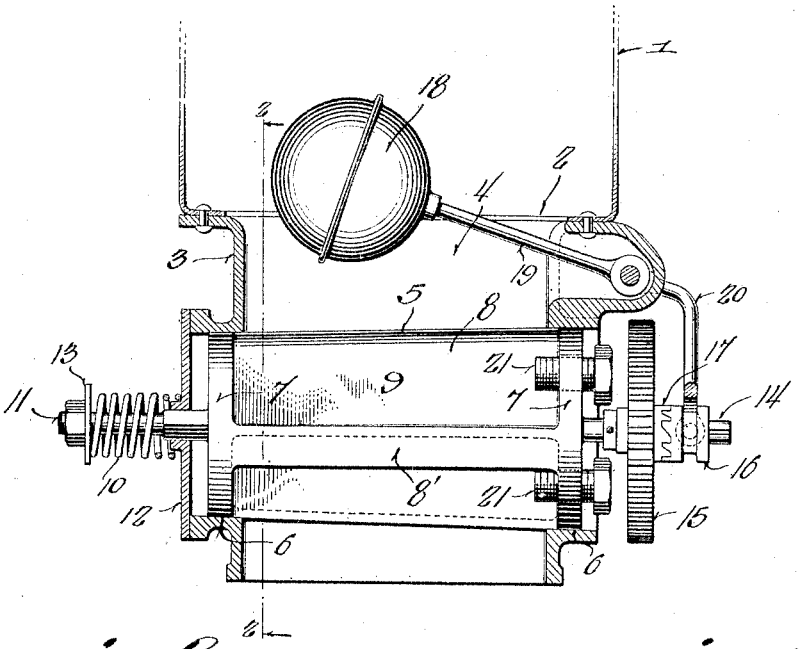

Fig. 2.

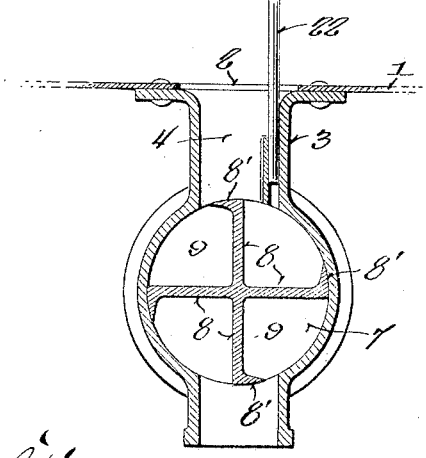

Fig. 3.

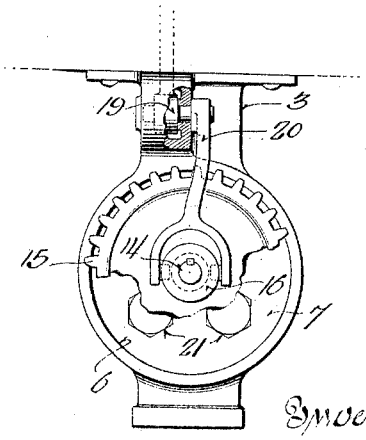

Witness:

Inventor:

John E. Boettcher

By

Attorneys.