J. S. RAY.

Coffin-Handles.

No. 162,949. Patented May 4, 1875.

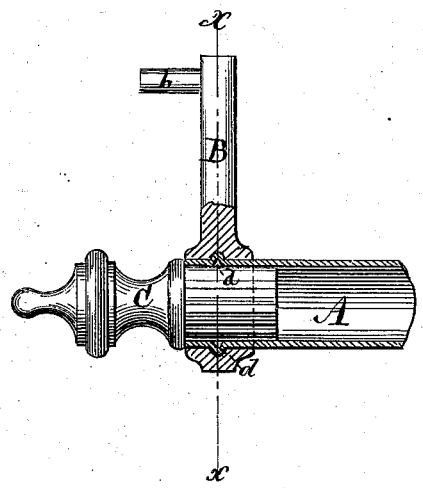

Fig. 1.

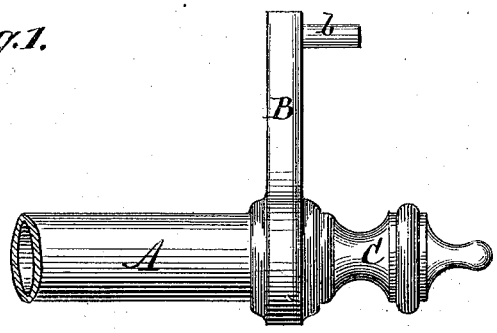

Fig. 2.

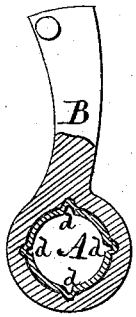

Witnesses
John Becker
Jno. Haynes

James S. Ray
by his Attorneys
Brown & Allen

THE GRAPHIC CO. PHOTO-LITH. 39 & 41 PARK PLACE, N.Y.