United States Patent [19]

Deleganes et al.

[11] **Patent Number: 4,561,049**

[45] **Date of Patent: Dec. 24, 1985**

[54] **CONTROL SYSTEM EMPLOYING A ROTARY KNOB**

[75] Inventors: **Sam M. Deleganes**, Aloha; **Steven C. Den Beste**, Beaverton, both of Oreg.

[73] Assignee: **Tektronix, Inc.**, Beaverton, Oreg.

[21] Appl. No.: **478,140**

[22] Filed: **Mar. 23, 1983**

[51] **Int. Cl.**[4] **G05B 9/02**; G06F 3/14

[52] **U.S. Cl.** **364/130**; 364/141; 364/188; 340/710; 340/723; 340/726

[58] **Field of Search** 364/130, 141, 188, 190; 340/709, 710, 723, 724, 725, 726, 359; 318/591

[56] **References Cited**

U.S. PATENT DOCUMENTS

3,541,541	11/1970	Engelbart	171/18 X
3,729,129	4/1973	Fletcher et al.	364/190 X
3,898,438	8/1975	Nater et al.	364/190 X
3,946,363	3/1976	Hakozaki	364/200
4,042,867	8/1977	Schaffer et al.	318/591 X
4,122,518	10/1978	Castleman et al.	364/190 X
4,190,834	2/1980	Doornink	340/709
4,223,257	9/1980	Miller	364/190 X
4,527,230	7/1985	Sato et al.	364/188 X

FOREIGN PATENT DOCUMENTS

WO82/01601	5/1982	PCT Int'l Appl.	318/591

Primary Examiner—Jerry Smith
Assistant Examiner—Jon D. Grossman
Attorney, Agent, or Firm—Robert S. Hulse; George T. Noe

[57] **ABSTRACT**

A microprocessor controlled system is provided which is responsive to displacement information such as rotation rate and position of a rotary knob for controlling instrument functions such as display scrolling, the setting and display of measurement conditions (operating parameters), and the entering and display of alphanumeric data.
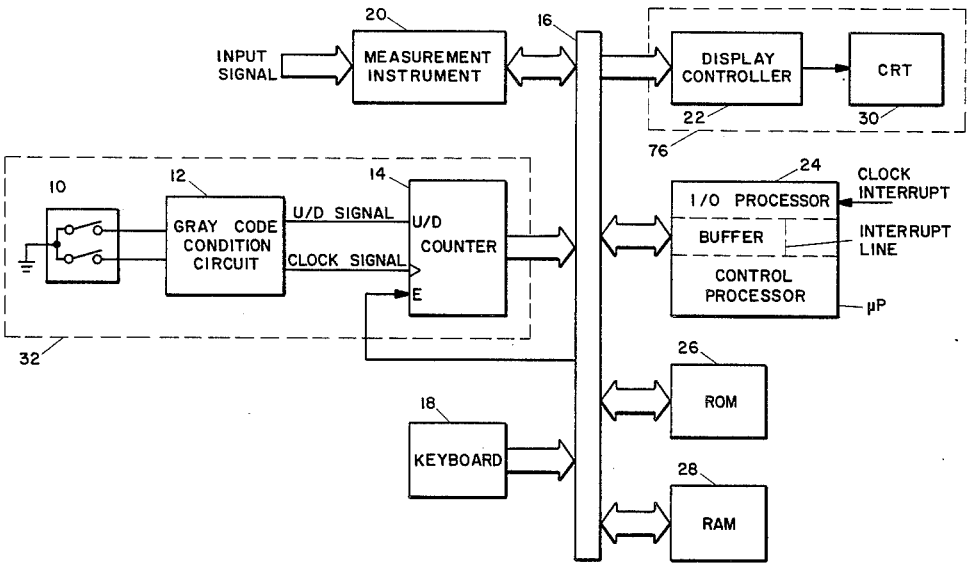
5 Claims, 6 Drawing Figures