United States Patent [19]

Wichterle

[11] **4,153,349**

[45] * **May 8, 1979**

[54] **SOFT CONTACT LENS WITH THIN EDGE**

[75] Inventor: **Otto Wichterle**, Prague, Czechoslovakia

[73] Assignee: **NPD Technologies, Inc.**, Las Vegas, Nev.

[*] Notice: The portion of the term of this patent subsequent to Jan. 2, 1985, has been disclaimed.

[21] Appl. No.: **519,383**

[22] Filed: **Oct. 30, 1974**

Related U.S. Application Data

[63] Continuation of Ser. No. 186,800, Oct. 5, 1971, abandoned, which is a continuation of Ser. No. 827,092, May 12, 1969, abandoned, which is a continuation of Ser. No. 318,627, Oct. 24, 1963, abandoned, which is a continuation-in-part of Ser. No. 229,727, Oct. 10, 1962, abandoned.

[51] **Int. Cl.**[2] **G02C 7/04**

[52] **U.S. Cl.** ..... **351/160 H**

[58] **Field of Search** 351/160–162; 264/1

[56] **References Cited**

U.S. PATENT DOCUMENTS

2,241,415	5/1941	Moulton	351/160 X
2,976,576	3/1961	Wichterle et al.	351/160 X
3,093,447	6/1963	Crandon	264/1
3,220,960	11/1965	Wichterle et al.	351/160 X

FOREIGN PATENT DOCUMENTS

921416	12/1954	Fed. Rep. of Germany	351/160

Primary Examiner—Conrad J. Clark

Attorney, Agent, or Firm—Cushman, Darby & CUshman

[57] **ABSTRACT**

This invention relates to novel contact lenses, to a method of preparing the same, and to apparatus for carrying out the method of the invention.
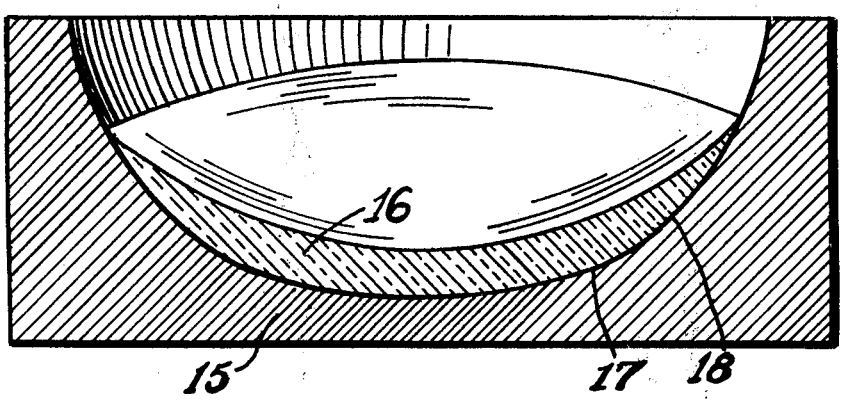
18 Claims, 7 Drawing Figures