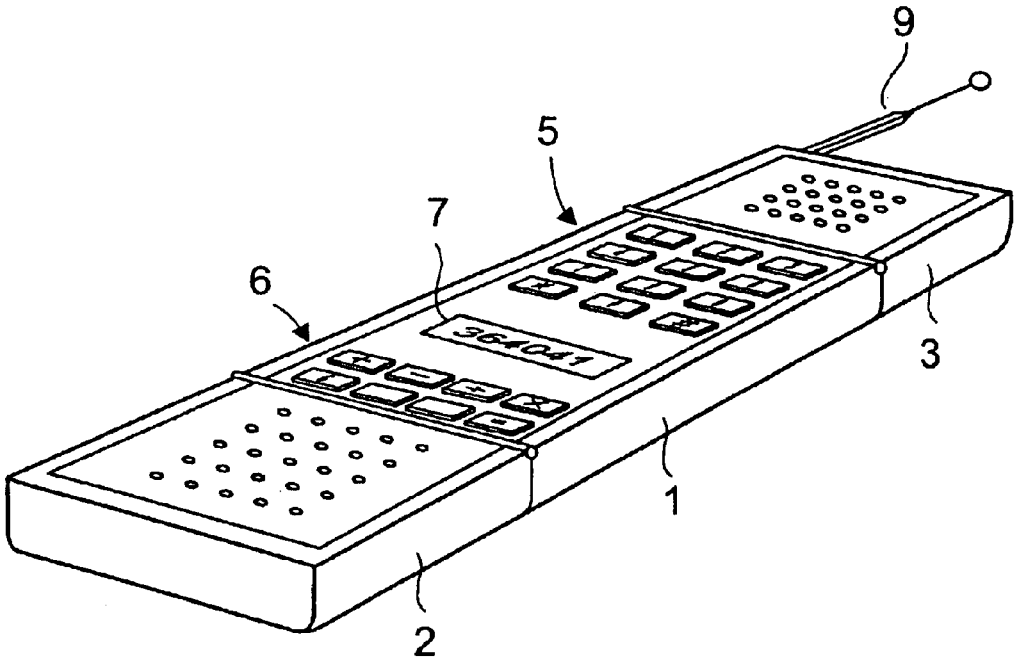

(PRIOR ART)

Fig. 1