US005331549A

United States Patent [19]

Crawford, Jr.

[11] Patent Number: 5,331,549

[45] Date of Patent: Jul. 19, 1994

[54] MEDICAL MONITOR SYSTEM

[76] Inventor: John M. Crawford, Jr., 15 Water St., Clinton, Hunterdon County, N.J. 08809

[21] Appl. No.: 922,577

[22] Filed: Jul. 30, 1992

[51] Int. Cl.[5] G06F 15/42

[52] U.S. Cl. 364/413.02; 364/413.01; 364/413.03

[58] Field of Search 364/413.03, 413.02, 364/413.01

[56] References Cited

U.S. PATENT DOCUMENTS

4,051,522 9/1977 Healy et al. 358/86
5,121,470 6/1992 Trautman 395/140
5,199,439 4/1993 Zimmerman et al. 128/670

Primary Examiner—Roy N. Envall, Jr.
Assistant Examiner—Ari M. Bai
Attorney, Agent, or Firm—McAulay Fisher Nissen Goldberg & Kiel

[57] ABSTRACT

A medical monitoring system in which a plurality of vital signs monitors for a plurality of patients provide data on a continuing basis to a central server which in turn provides supervisory screen display that indicates the normal status or varying levels of alarm status of individual patients. The system permits an overview display of a floor and also provides a zoom-in display of an individual site patient together with an indication of a limited number of vital signs and a warning alarm signal when any one or more vital signs is outside of a first warning set of predetermined limits or a more critical alarm set of predetermined limits.
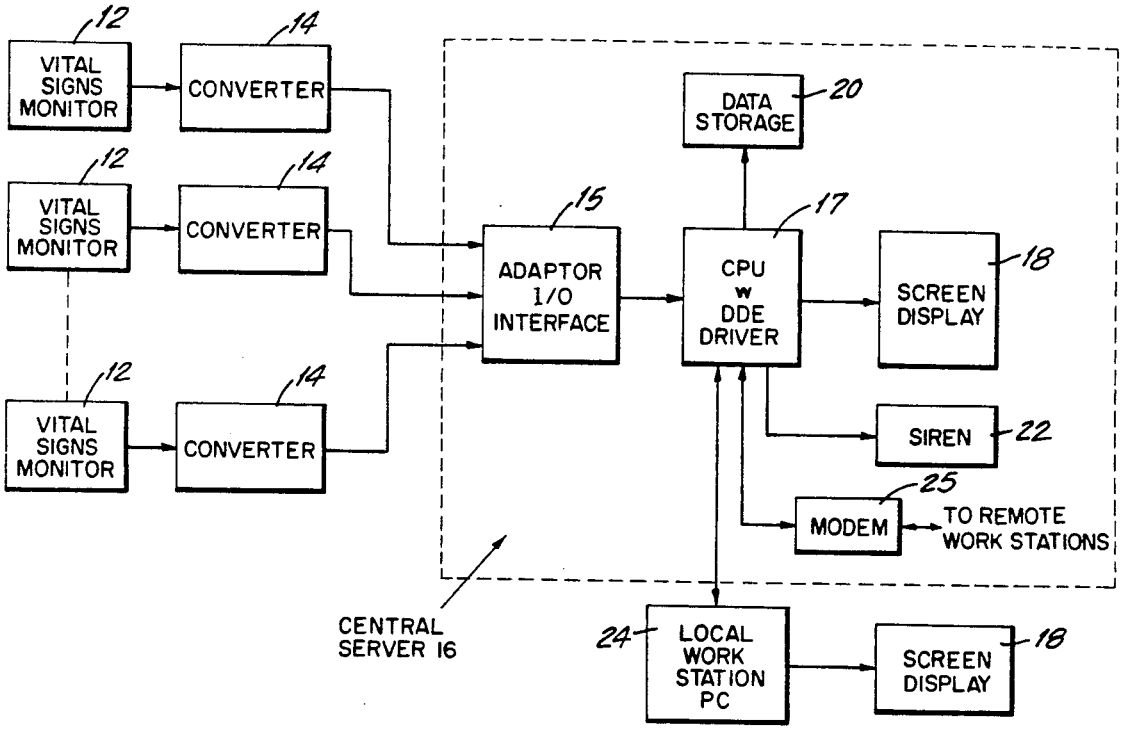
18 Claims, 7 Drawing Sheets