US009915149B2

(12) **United States Patent**
**Rice**

(10) **Patent No.: US 9,915,149 B2**
(45) **Date of Patent: Mar. 13, 2018**

(54) **SYSTEM AND METHOD FOR A FLUIDIC BARRIER ON THE LOW PRESSURE SIDE OF A FAN BLADE**

(71) Applicant: **Rolls Royce North American Technologies Inc**, Indianapolis, IN (US)

(72) Inventor: **Edward C. Rice**, Indianapolis, IN (US)

(73) Assignee: **Rolls-Royce North American Technologies Inc.**, Indianapolis, IN (US)

( * ) Notice: Subject to any disclaimer, the term of this patent is extended or adjusted under 35 U.S.C. 154(b) by 376 days.

(21) Appl. No.: **14/837,942**

(22) Filed: **Aug. 27, 2015**

(65) **Prior Publication Data**

US 2017/0058676 A1 Mar. 2, 2017

(51) **Int. Cl.**

| | |
|---|---|
| ***F01D 5/14*** | (2006.01) |
| ***F02K 3/06*** | (2006.01) |
| ***F01D 5/18*** | (2006.01) |
| ***F01D 11/10*** | (2006.01) |
| ***F01D 25/24*** | (2006.01) |
| ***F01D 11/04*** | (2006.01) |
| ***F02K 3/075*** | (2006.01) |

(52) **U.S. Cl.**

CPC ..... ***F01D 5/145*** (2013.01); ***F01D 5/18*** (2013.01); ***F01D 11/04*** (2013.01); ***F01D 11/10*** (2013.01); ***F01D 25/24*** (2013.01); ***F02K 3/06*** (2013.01); ***F02K 3/075*** (2013.01); *F05D 2220/36* (2013.01); *F05D 2240/12* (2013.01); *F05D 2240/127* (2013.01)

(58) **Field of Classification Search**

CPC . F01D 5/145; F01D 5/146; F01D 5/18; F01D 5/183; F01D 11/04; F01D 11/10; F01D 25/24; F01D 1/023; F02K 3/06; F02K 3/075; F05D 2220/36; F05D 2240/12; F05D 2240/127; F05D 2240/306

USPC ..... 415/144, 171.1, 173.7

See application file for complete search history.

(56) **References Cited**

U.S. PATENT DOCUMENTS

| | | | | |
|---|---|---|---|---|
| 3,262,635 | A * | 7/1966 | Smuland | F01D 11/02 277/414 |
| 3,442,493 | A | 5/1969 | Smith, Jr. | |
| 3,549,272 | A * | 12/1970 | Bouiller | F01D 5/022 415/130 |
| 3,739,580 | A | 6/1973 | Bland et al. | |
| 3,861,822 | A | 1/1975 | Wanger | |
| 3,946,554 | A | 3/1976 | Neumann | |
| 4,000,868 | A | 1/1977 | Gregor | |
| 4,089,493 | A | 5/1978 | Paulson | |
| 4,235,397 | A | 11/1980 | Compton | |
| 4,254,619 | A | 3/1981 | Giffin, III et al. | |
| 4,705,452 | A | 11/1987 | Karadimas | |
| 4,791,783 | A | 12/1988 | Neitzel | |

(Continued)

*Primary Examiner* — Ehud Gartenberg
*Assistant Examiner* — James McGlynn
(74) *Attorney, Agent, or Firm* — Duane Morris LLP

(57) **ABSTRACT**

A turbofan engine has a fan portion in fluid communication with a core stream and a bypass stream of air separated by splitters disposed both upstream and downstream of the fan portion. A fluid passage is defined between the splitters. The turbofan engine has a plurality of high pressure fluid jets originating from the low pressure side of the fan blades, the jets restricting the migration of the core stream into the bypass stream through the fluid passage.
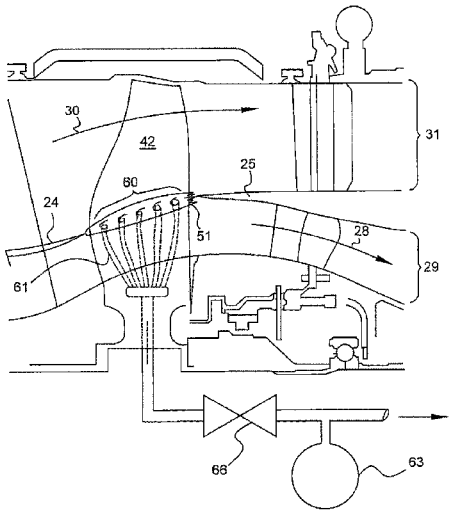
**19 Claims, 15 Drawing Sheets**