US009411449B2

(12) **United States Patent**
Itamoto

(10) **Patent No.: US 9,411,449 B2**
(45) **Date of Patent: Aug. 9, 2016**

(54) **MOBILE TERMINAL AND OPERATION METHOD THEREFOR**

(71) Applicant: **NEC CASIO Mobile Communications, Ltd.**, Kanagawa (JP)

(72) Inventor: **Shinichi Itamoto**, Kanagawa (JP)

(73) Assignee: **NEC CORPORATION**, Tokyo (JP)

(*) Notice: Subject to any disclaimer, the term of this patent is extended or adjusted under 35 U.S.C. 154(b) by 15 days.

(21) Appl. No.: **14/377,512**

(22) PCT Filed: **Jan. 9, 2013**

(86) PCT No.: **PCT/JP2013/050172**

§ 371 (c)(1),
(2) Date: **Aug. 8, 2014**

(87) PCT Pub. No.: **WO2013/118522**

PCT Pub. Date: **Aug. 15, 2013**

(65) **Prior Publication Data**

US 2015/0011263 A1 Jan. 8, 2015

(30) **Foreign Application Priority Data**

Feb. 8, 2012 (JP) 2012-024924

(51) **Int. Cl.**

G06F 3/041	(2006.01)
G06F 3/0488	(2013.01)
G06F 1/16	(2006.01)
H04M 1/02	(2006.01)

(52) **U.S. Cl.**

CPC ***G06F 3/041*** (2013.01); ***G06F 1/1616*** (2013.01); ***G06F 1/1649*** (2013.01); ***G06F 1/1692*** (2013.01); ***G06F 1/1694*** (2013.01); ***G06F 3/0488*** (2013.01); ***G06F 3/04883*** (2013.01); ***H04M 1/0202*** (2013.01); ***H04M 1/0266*** (2013.01); *G06F 2203/04104* (2013.01); *H04M 2250/16* (2013.01); *H04M 2250/22* (2013.01)

(58) **Field of Classification Search**

CPC G06F 3/041
USPC 455/550.1, 556.1, 575.1, 575.3
See application file for complete search history.

(56) **References Cited**

U.S. PATENT DOCUMENTS

7,046,235	B2 *	5/2006	Katoh	345/173
8,933,874	B2 *	1/2015	Lundqvist et al.	345/108
2011/0209098	A1	8/2011	Hinckley et al.	

FOREIGN PATENT DOCUMENTS

EP	2341418	7/2011
JP	2007-141029	6/2007
JP	2009-157908	7/2009
JP	2009-187290	8/2009

(Continued)

OTHER PUBLICATIONS

International Search Report PCT/JP2013/050172 dated Apr. 9, 2013.

(Continued)

Primary Examiner — Tuan H Nguyen
(74) *Attorney, Agent, or Firm* — Young & Thompson

(57) **ABSTRACT**

Mobile terminal (**1**) includes touch panels **10***a* and **10***b*, one on each surface of housing (**2**). When touch operations are simultaneously performed on touch panels **10***a* and **10***b*, an action corresponding to combination of the touch operations is performed.
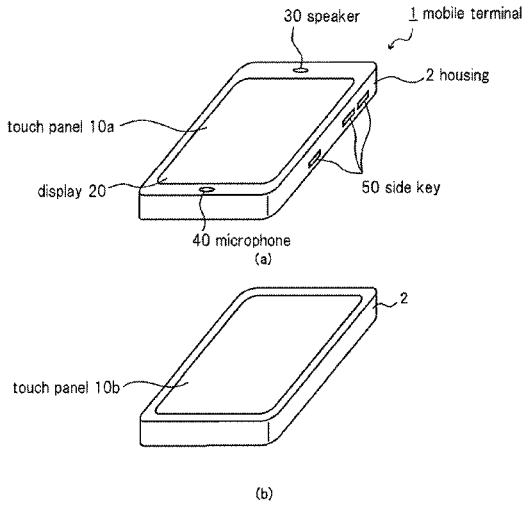
9 Claims, 11 Drawing Sheets