US009411349B2

(12) **United States Patent**
Kang et al.

(10) **Patent No.: US 9,411,349 B2**
(45) **Date of Patent: Aug. 9, 2016**

(54) **OVERCURRENT DETECTION OF LOAD CIRCUITS WITH TEMPERATURE COMPENSATION**

(71) Applicant: **LITTELFUSE, INC.**, Chicago, IL (US)

(72) Inventors: **Sam S. Kang**, Pleasanton, CA (US); **John W. Jorgensen**, Reno, NV (US); **Chad N. Marak**, Cedar Park, TX (US)

(73) Assignee: **LITELFUSE, INC.**, Chicago, IL (US)

(*) Notice: Subject to any disclaimer, the term of this patent is extended or adjusted under 35 U.S.C. 154(b) by 83 days.

(21) Appl. No.: **14/540,078**

(22) Filed: **Nov. 13, 2014**

(65) **Prior Publication Data**

US 2015/0130438 A1 May 14, 2015

Related U.S. Application Data

(60) Provisional application No. 61/904,135, filed on Nov. 14, 2013.

(51) **Int. Cl.**
G05F 1/573 (2006.01)
H02H 9/02 (2006.01)

(52) **U.S. Cl.**
CPC ***G05F 1/573*** (2013.01); ***H02H 9/025*** (2013.01)

(58) **Field of Classification Search**
CPC G05F 1/573; H02M 2001/327
See application file for complete search history.

(56) **References Cited**

U.S. PATENT DOCUMENTS

3,900,719 A * 8/1975 Yamauchi G06J 1/00 708/7
5,568,347 A * 10/1996 Shirai H03K 17/0822 361/103
5,796,244 A * 8/1998 Chen G05F 3/30 323/313
5,892,647 A * 4/1999 Mizoe G05F 1/573 361/101
6,330,173 B1 * 12/2001 Yamasaki G05F 1/465 327/540
6,356,141 B1 * 3/2002 Yamauchi G05F 3/262 323/312
7,622,902 B1 * 11/2009 Kao G05F 1/575 323/276
7,659,706 B2 * 2/2010 Nishida H02H 3/087 323/314
7,737,675 B2 * 6/2010 Murase G05F 3/30 323/313
2001/0011921 A1 * 8/2001 Ooishi G05F 1/465 327/540
2002/0030475 A1 * 3/2002 D'Angelo G05F 3/242 323/316
2003/0197532 A1 * 10/2003 Tsuchida H03K 17/0822 327/108
2004/0100234 A1 * 5/2004 Okubo G05F 1/569 323/276

(Continued)

OTHER PUBLICATIONS

International Search Report and Written Opinion from corresponding PCT/US2014/065619 mailed Feb. 20, 2015.

Primary Examiner — Timothy J Dole
Assistant Examiner — Yusef Ahmed

(57) **ABSTRACT**

An improved current limiting circuit including a switch having a first terminal and a second terminal, the first and second terminal configured to connect a power supply to a load. A first resistor connected in series between the first terminal and a first constant current source. A second resistor connected in series between the second terminal and a second constant current source. A control circuit configured to measure a voltage drop across the first resistor and compare the voltage drop to a voltage drop across the switch.
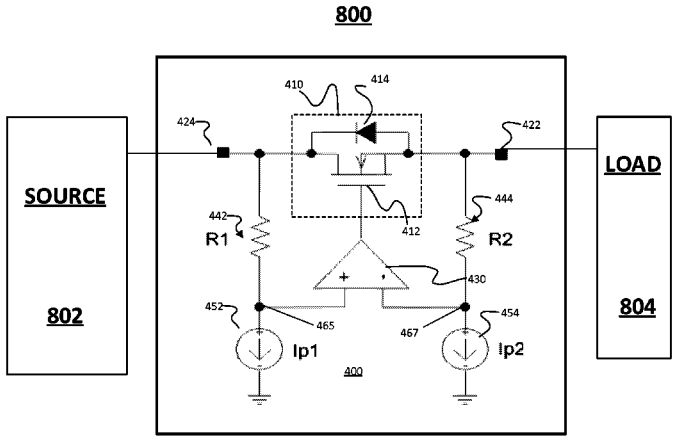
19 Claims, 7 Drawing Sheets