US009410249B2

(12) **United States Patent**
Male et al.

(10) **Patent No.: US 9,410,249 B2**
(45) **Date of Patent: Aug. 9, 2016**

(54) **WAFER RELEASING**

(71) Applicant: **Infineon Technologies AG**, Neubiberg (DE)

(72) Inventors: **Mathias Male**, Lienz (AT); **Christian Maier**, Eberndorf (AT); **Philemon Schweizer**, Feffernitz (AT); **Manfred Bucher**, Villach (AT); **Thomas Steiner**, Villach (AT)

(73) Assignee: **Infineon Technologies AG**, Neubiberg (DE)

(*) Notice: Subject to any disclaimer, the term of this patent is extended or adjusted under 35 U.S.C. 154(b) by 174 days.

(21) Appl. No.: **14/279,137**

(22) Filed: **May 15, 2014**

(65) **Prior Publication Data**

US 2015/0332951 A1 Nov. 19, 2015

(51) **Int. Cl.**

H01L 21/683	(2006.01)
C23C 16/458	(2006.01)
H01L 21/687	(2006.01)
H02N 13/00	(2006.01)

(52) **U.S. Cl.**

CPC ***C23C 16/458*** (2013.01); ***H01L 21/6831*** (2013.01); ***H01L 21/6833*** (2013.01); ***H01L 21/68735*** (2013.01); ***H01L 21/68742*** (2013.01); ***H01L 21/68785*** (2013.01); ***H02N 13/00*** (2013.01)

(58) **Field of Classification Search**

CPC H01L 21/6833
USPC 361/234
See application file for complete search history.

(56) **References Cited**

U.S. PATENT DOCUMENTS

5,325,261	A	6/1994	Horwitz	
5,677,824	A	10/1997	Harashima et al.	
2003/0178145	A1	9/2003	Anderson et al.	
2005/0252454	A1 *	11/2005	Parkhe	H01L 21/6831 118/729
2008/0190367	A1	8/2008	Lee et al.	
2008/0223400	A1	9/2008	Onishi et al.	
2009/0162183	A1	6/2009	Davison	
2009/0209112	A1	8/2009	Koelmel et al.	
2013/0168353	A1	7/2013	Okita et al.	
2013/0206070	A1	8/2013	Chen	
2013/0272686	A1	10/2013	Okada et al.	
2014/0017900	A1	1/2014	Doba et al.	
2014/0311676	A1	10/2014	Hatoh et al.	

FOREIGN PATENT DOCUMENTS

JP	6338559	A	12/1994
WO	2013108750	A1	7/2013

* cited by examiner

Primary Examiner — Thienvu Tran
Assistant Examiner — Kevin J Comber
(74) *Attorney, Agent, or Firm* — Slater Matsil, LLP

(57) **ABSTRACT**

Embodiments of the present invention provide a chuck system for handling a wafer that comprises a first and a second main surface. The chuck system includes a chuck configured to hold the wafer at the second main surface facing the chuck and a release device. The chuck system further includes an actuator configured to lift the release device away from the chuck. The release device is configured such that the release device mechanically engages with the wafer at an edge portion of the second main surface of the wafer when being lifted, thereby releasing the wafer from the chuck.
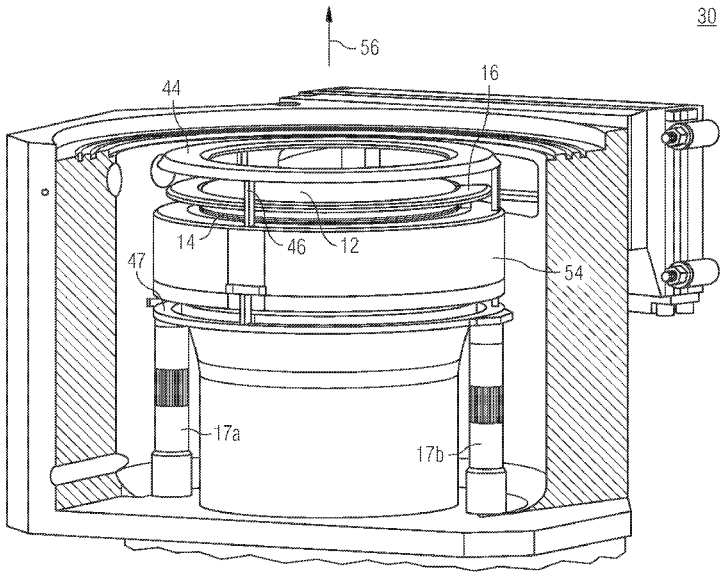
14 Claims, 17 Drawing Sheets