US009409849B2

(12) **United States Patent**
Karanjgaokar

(10) **Patent No.: US 9,409,849 B2**
(45) **Date of Patent: Aug. 9, 2016**

(54) **RECOVERY OF AROMATIC CARBOXYLIC ACIDS AND OXIDATION CATALYST**

(75) Inventor: **C. G. Karanjgaokar**, Mumbai (IN)

(73) Assignee: **Invista North America S.A.R.L.**, Wilmington, DE (US)

(*) Notice: Subject to any disclaimer, the term of this patent is extended or adjusted under 35 U.S.C. 154(b) by 0 days.

(21) Appl. No.: **13/637,460**

(22) PCT Filed: **Mar. 16, 2011**

(86) PCT No.: **PCT/US2011/028666**

§ 371 (c)(1),
(2), (4) Date: **Dec. 10, 2012**

(87) PCT Pub. No.: **WO2011/119395**

PCT Pub. Date: **Sep. 29, 2011**

(65) **Prior Publication Data**

US 2013/0079551 A1 Mar. 28, 2013

(30) **Foreign Application Priority Data**

Mar. 26, 2010 (IN) 826/CHE/2010

(51) **Int. Cl.**

C07C 51/48	(2006.01)
C07C 51/265	(2006.01)
C22B 7/00	(2006.01)

(52) **U.S. Cl.**

CPC ***C07C 51/48*** (2013.01); ***C07C 51/265*** (2013.01); ***C22B 7/009*** (2013.01); *Y02P 10/214* (2015.11)

(58) **Field of Classification Search**

None

See application file for complete search history.

(56) **References Cited**

U.S. PATENT DOCUMENTS

3,341,470	A	9/1967	Hensley	
4,298,759	A	11/1981	Harper et al.	
4,459,365	A	7/1984	Suzuki et al.	
4,490,297	A	12/1984	Feld et al.	
4,910,175	A	3/1990	Michel et al.	
4,939,297	A *	7/1990	Browder et al.	562/485
5,955,394	A	9/1999	Kelly	
6,001,763	A	12/1999	Feitler	
6,307,099	B1	10/2001	Turner	
7,358,392	B2	4/2008	Sheppard et al.	

FOREIGN PATENT DOCUMENTS

RU 2341512 C2 12/2008

* cited by examiner

Primary Examiner — Karl J Puttlitz

(74) *Attorney, Agent, or Firm* — Finnegan, Henderson, Farabow, Garrett & Dunner, LLP

(57) **ABSTRACT**

The present invention relates to a process for recovery of catalyst, aromatic polycarboxylic acids and aromatic monocarboxylic acids from a residue stream from manufacture of an aromatic polycarboxylic acid.
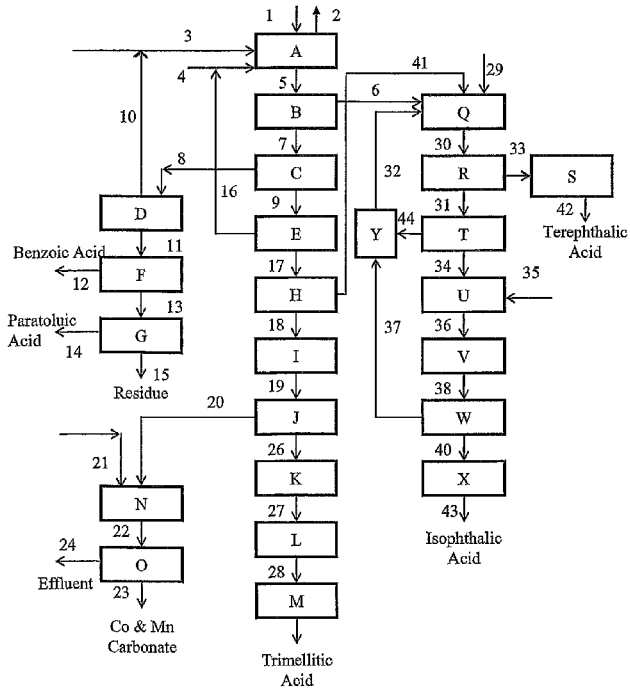
18 Claims, 1 Drawing Sheet