S. UTTER.

Cooking Stove.

No. 349. Patented Aug. 8, 1837.

Section from front to back

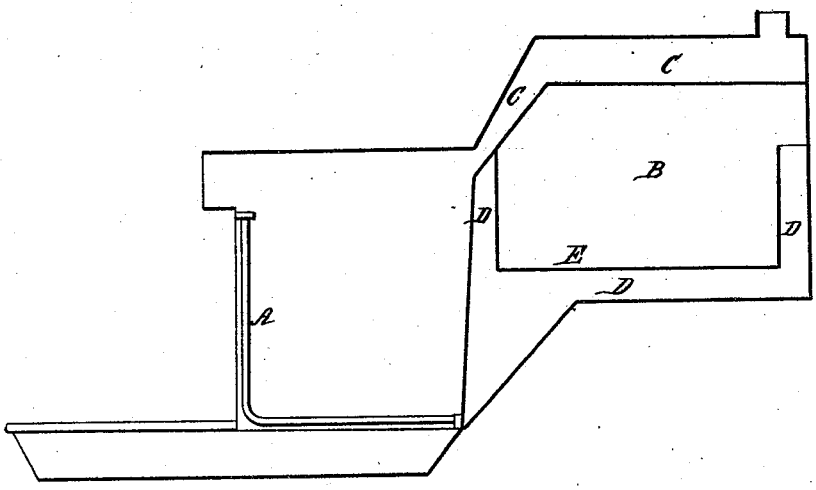

N. PETERS. Photo-Lithographer, Washington, D. C.