April 29, 1924.

J. B. DAVIES

1,492,548

TYPEWRITER AND LIKE KEYBOARD MECHANISM

Filed July 22, 1922

Fig. 1.

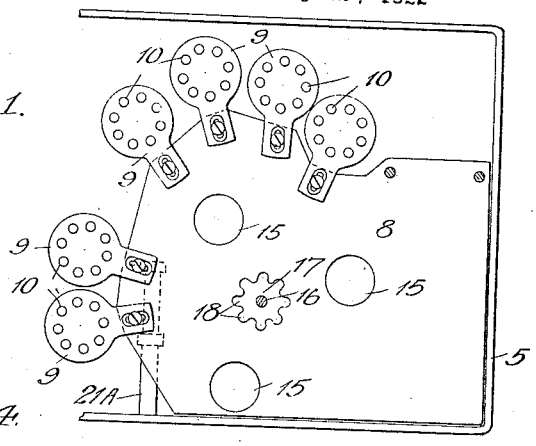

Fig. 4.

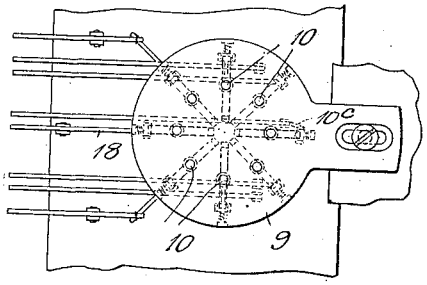

Fig. 2.

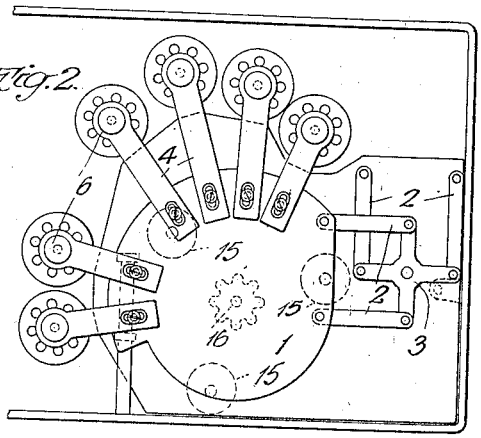

Fig. 3.

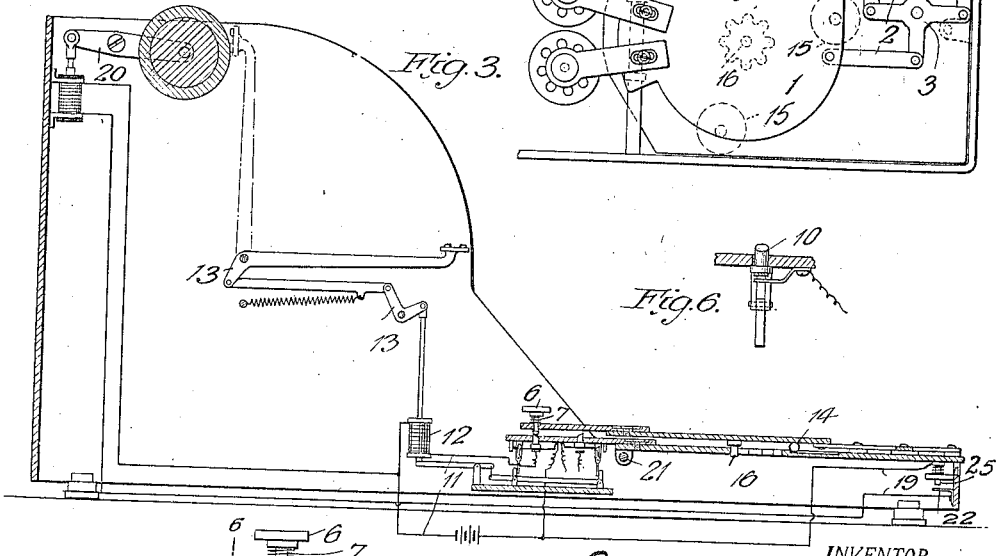

Fig. 6.

Fig. 5.

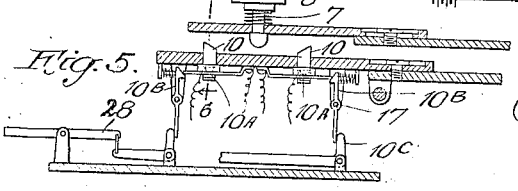

INVENTOR.

Joseph Bartlett Davies

BY Thomas E. Robertson

ATTORNEY