H. HUBBELL.

ATTACHMENT PLUG.

APPLICATION FILED MAR. 15, 1915.

1,180,648. Patented Apr. 25, 1916.

Fig. 2

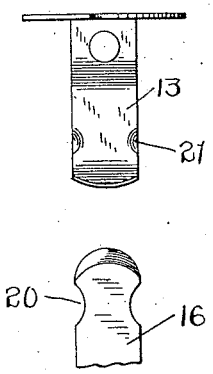

Fig. 1

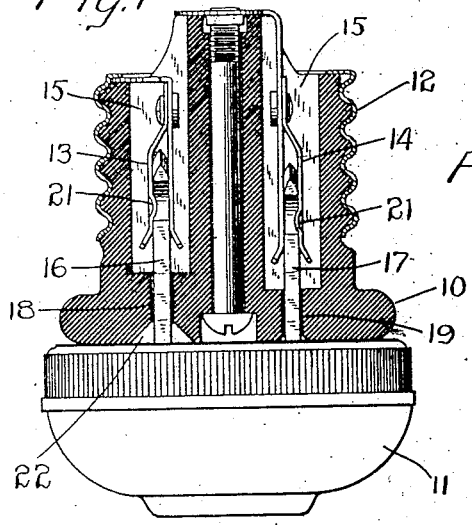

Fig. 3

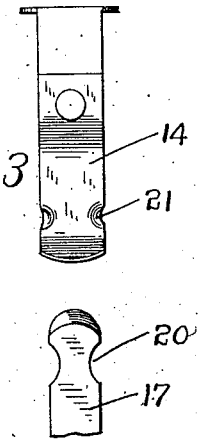

Fig. 4

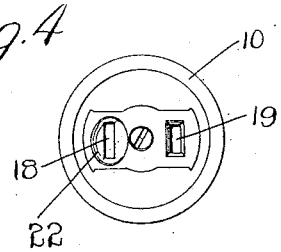

Fig. 5

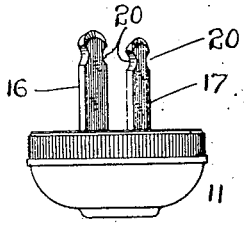

Fig. 6

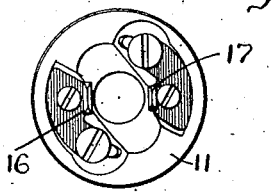

WITNESSES:

H. W. Meade

E. M. Culver

INVENTOR

Harvey Hubbell

BY

A. M. Wooster

ATTORNEY

PHOTO-LITHO by SACKETT & WILHELMS CORP. N.Y.