US005479848A

United States Patent [19]

Versini

[11] **Patent Number: 5,479,848**

[45] **Date of Patent: Jan. 2, 1996**

[54] **DEVICE FOR THE INSTANT, AUTOMATIC, PRESSURIZED PERCOLATION OF FOOD LIQUIDS**

[76] Inventor: **Rolland Versini**, 1 square des Bleuets, Calas 13480, France

[21] Appl. No.: **313,042**

[22] PCT Filed: **Apr. 5, 1993**

[86] PCT No.: **PCT/FR93/00340**

§ 371 Date: **Nov. 17, 1994**

§ 102(e) Date: **Nov. 17, 1994**

[87] PCT Pub. No.: **WO93/19655**

PCT Pub. Date: **Oct. 14, 1993**

[30] **Foreign Application Priority Data**

Apr. 6, 1992 [FR] France 92 04469

[51] **Int. Cl.**[6] **A47J 31/00**; A47J 31/24; A47J 31/34; A47J 31/36

[52] **U.S. Cl.** ..... **99/287**; 99/289 R; 99/295; 99/297; 99/302 P

[58] **Field of Search** ..... 99/483, 516, 280, 99/287, 289 R, 293, 302 R; 219/274, 284, 288; 100/73, 131, 264, 244; 422/275

[56] **References Cited**

U.S. PATENT DOCUMENTS

4,796,521	1/1989	Grossi	99/287
4,885,986	12/1989	Grossi	99/289 R
4,934,258	6/1990	Versini .	
5,094,156	3/1992	Noreille et al.	99/516
5,230,277	7/1993	Bianco	99/287
5,275,089	1/1994	Armellin	99/289 R
5,302,407	4/1994	Vetterli	426/433
5,387,256	2/1995	Enomoto	99/483

FOREIGN PATENT DOCUMENTS

745939	2/1970	Belgium .
2657244	7/1991	France .
91/10391	1/1991	WIPO .

OTHER PUBLICATIONS

FR 86 02636, date unknown.

Primary Examiner—Timothy F. Simone

[57] **ABSTRACT**

Device for instant, automatic, pressurized percolation of food liquids provided with a horizontal mechanical assembly including as main elements functional sections, especially a stationary rail, an infusion chamber with a movable bottom and a movable part carrying the compression piston sliding on the rail, and a filling chamber linked to the movable bottom by a rod whose position and section is adapted to control the movement of a scraper pivoting on a horizontal pivot. The invention is used for preparing espresso coffees.
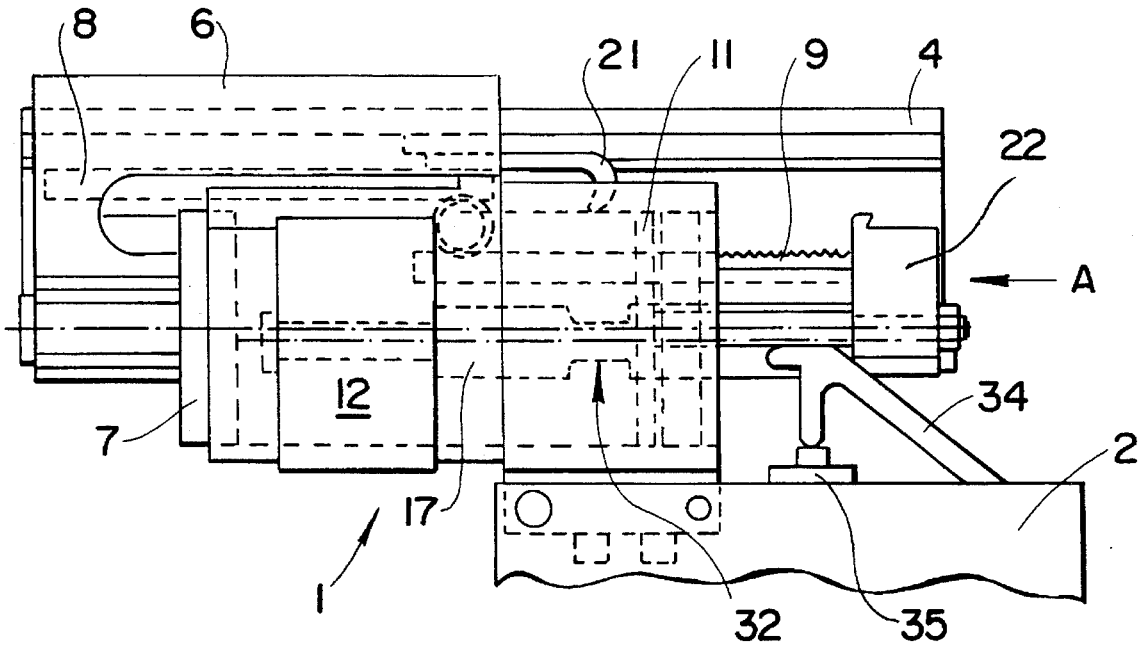
20 Claims, 3 Drawing Sheets