COMESTIBLES CONTAINER WITH WATER SOLUBLE PRODUCT THEREIN

Filed Aug. 26, 1963

FIG. 1

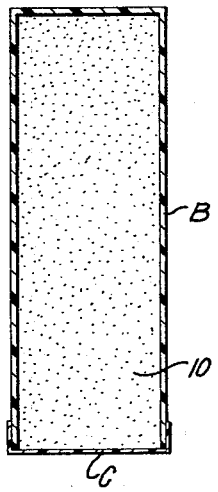

FIG. 3

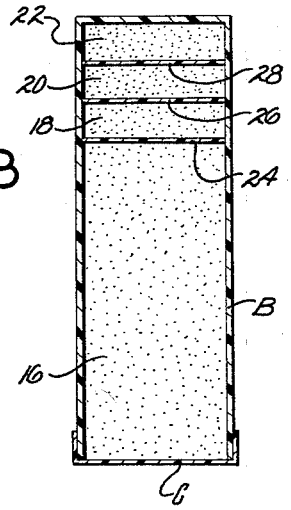

FIG 2

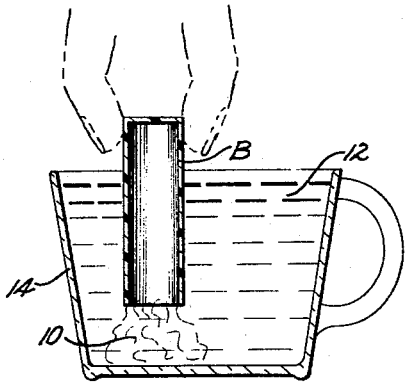

FIG. 4

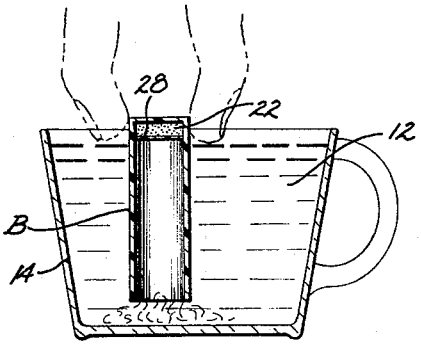

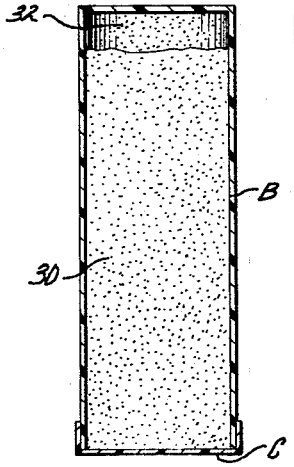

FIG. 6

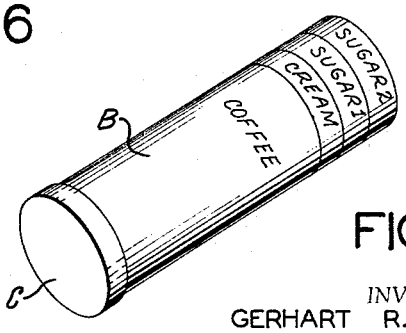

FIG. 5

INVENTOR.
GERHART R. SOMMER

BY FULWIDER, PATTON,
RIEBER, LEE & UTECHT

ATTORNEYS