US005673148A

United States Patent [19]

Morris et al.

[11] Patent Number: 5,673,148

[45] Date of Patent: Sep. 30, 1997

[54] **ENCAPSULATED RETROREFLECTIVE ELEMENTS AND METHOD FOR MAKING SAME**

[75] Inventors: **Geoffrey P. Morris**, White Bear Lake; **Kenton D. Budd**, Woodbury, both of Minn.

[73] Assignee: **Minnesota Mining and Manufacturing Company**, St. Paul, Minn.

[21] Appl. No.: **264,729**

[22] Filed: **Jun. 23, 1994**

[51] **Int. Cl.**[6] **G02B 5/128**; G02B 5/122

[52] **U.S. Cl.** **359/536**; 359/529; 359/530; 359/538; 359/539; 359/541

[58] **Field of Search** 359/529, 530, 359/534–541; 428/285

[56] **References Cited**

U.S. PATENT DOCUMENTS

2,366,516	1/1945	Geffcken et al.	117/124
2,713,286	7/1955	Taylor .	
2,963,378	12/1960	Palmquist et al.	106/193
3,025,764	3/1962	McKenzie .	
3,228,897	1/1966	Nellessen	260/16
3,251,704	5/1966	Nellessen	106/193
3,420,597	1/1969	Nellessen et al. .	
3,535,019	10/1970	Longlet et al. .	
3,700,305	10/1972	Bingham .	
3,709,706	1/1973	Sowman	106/57
3,835,087	9/1974	Searight et al.	260/33.6 R
4,263,345	4/1981	Bingham	427/163
4,469,645	9/1984	Eigenmann	264/1.6
4,703,999	11/1987	Benson .	
4,855,189	8/1989	Simopoulos et al.	428/690
5,156,885	10/1992	Budd	427/70
5,338,595	8/1994	Li	359/540

FOREIGN PATENT DOCUMENTS

877 083	9/1961	United Kingdom .

Primary Examiner—James Phan

Attorney, Agent, or Firm—Gary L. Griswold; Walter N. Kirn; Robert H. Jordan

[57] **ABSTRACT**

Encapsulated retroreflective element comprising a retroreflective assembly made up of a transparent optical body and a reflective member and essentially completely encapsulated within a dense, substantially transparent oxide coating. Also a method for making such retroreflective elements and articles and compositions comprising such retroreflective elements.
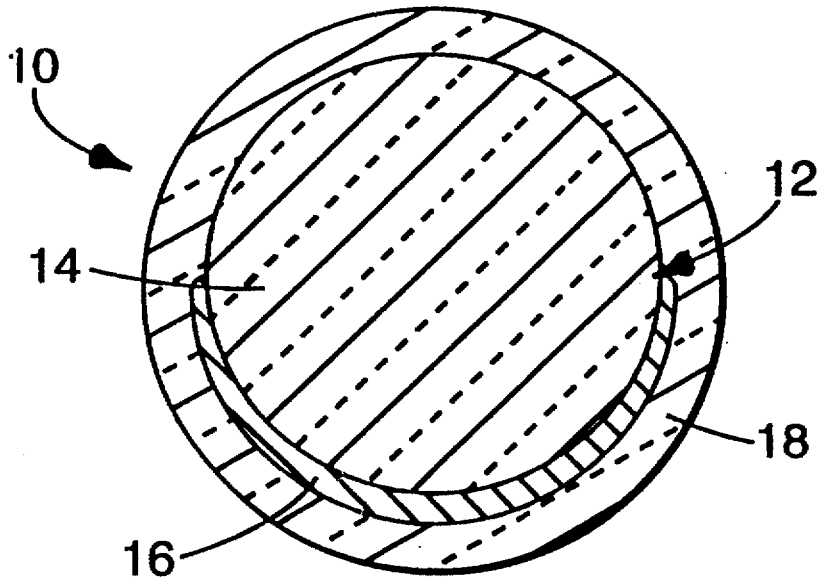
19 Claims, 1 Drawing Sheet