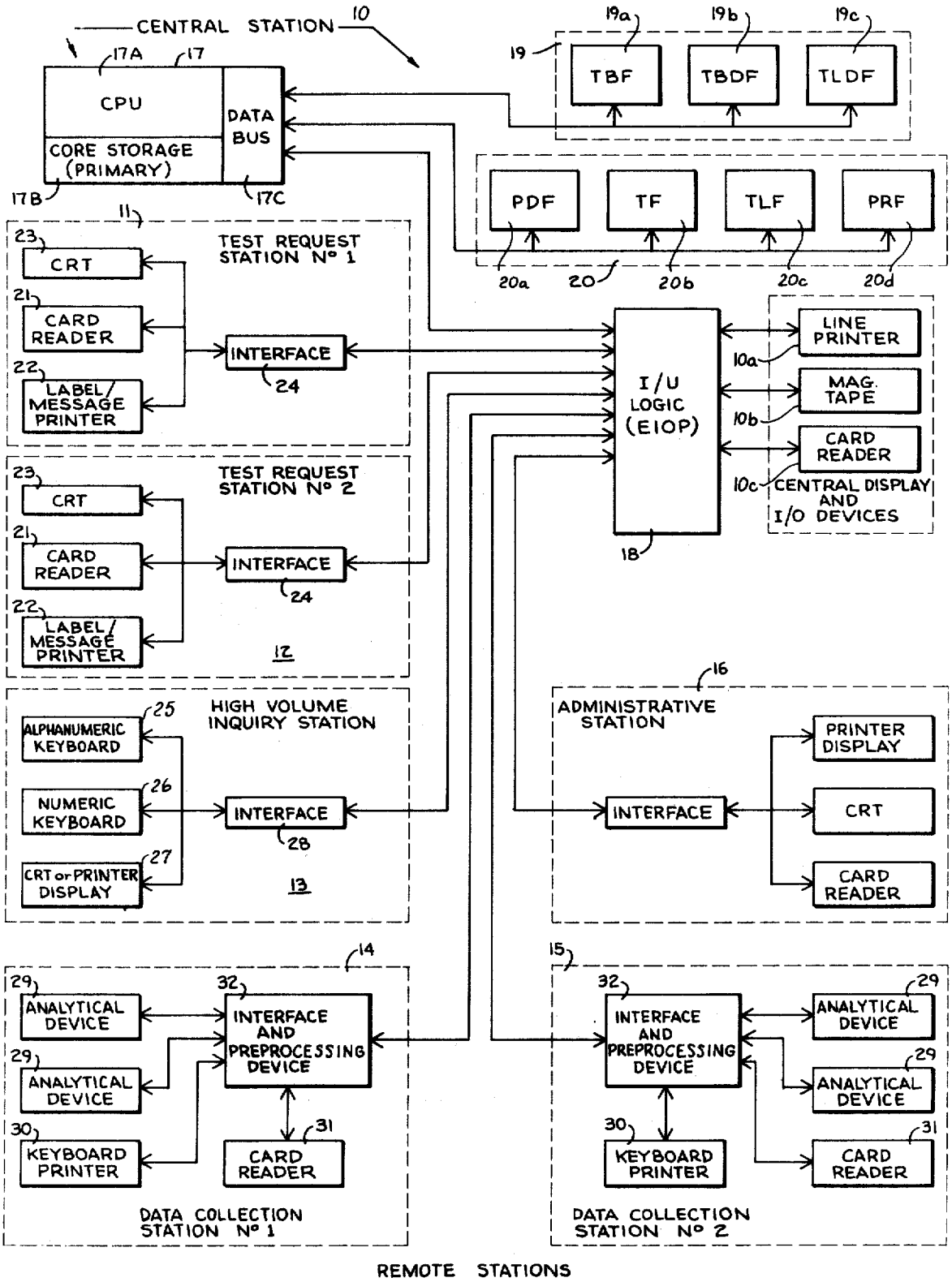
CENTRAL STATION 10
17A
17
CPU
CORE STORAGE (PRIMARY)
DATA BUS
17B
17C
19
19a
19b
19c
TBF
TBDF
TLDF
PDF
TF
TLF
PRF
20a
20
20b
20c
20d
11
TEST REQUEST STATION Nº 1
23
CRT
21
CARD READER
22
LABEL/ MESSAGE PRINTER
INTERFACE
24
TEST REQUEST STATION Nº 2
12
I/U LOGIC (EIOP)
18
LINE PRINTER
MAG. TAPE
CARD READER
10a
10b
10c
CENTRAL DISPLAY AND I/O DEVICES
HIGH VOLUME INQUIRY STATION
25
ALPHANUMERIC KEYBOARD
26
NUMERIC KEYBOARD
27
CRT or PRINTER DISPLAY
28
13
16
ADMINISTRATIVE STATION
PRINTER DISPLAY
CRT
CARD READER
14
29
ANALYTICAL DEVICE
32
INTERFACE AND PREPROCESSING DEVICE
30
KEYBOARD PRINTER
31
CARD READER
DATA COLLECTION STATION Nº 1
15
DATA COLLECTION STATION Nº 2
REMOTE STATIONS

Fig-1