United States Patent [19]

Mitchell, Jr.

[11] **3,872,448**

[45] **Mar. 18, 1975**

[54] **HOSPITAL DATA PROCESSING SYSTEM**

[75] Inventor: **Baker A. Mitchell, Jr.**, Houston, Tex.

[73] Assignee: **Community Health Computing, Inc.**, Houston, Tex.

[22] Filed: **Dec. 11, 1972**

[21] Appl. No.: **313,684**

[52] **U.S. Cl.** **340/172.5**

[51] **Int. Cl.** **G06f 15/06, G06f 15/42**

[58] **Field of Search** 340/172.5; 444/1

[56] **References Cited**

UNITED STATES PATENTS

3,316,539	4/1967	Carleton	340/172.5
3,611,301	10/1971	Parks	340/172.5
R27,580	2/1973	Rawson	340/172.5

OTHER PUBLICATIONS

Allen, S. I., et al., "Use of a Time-Shared General--Purpose File-Handling System in Hospital Research," Proceeding of the IEEE, Vol. 54, Issue 12, December 1966, pp. 1641-1648, L7140111.

Baruch, J. J., "Hospital Automation Via Computer Time-Sharing," Computers in Biomedical Research, Vol. II, 1965, pp. 291-312, L71400042.

Primary Examiner—Raulfe B. Zache

Attorney, Agent, or Firm—W. F. Hyer; Marvin B. Eickenroht

[57] **ABSTRACT**

A system for automatically handling and processing hospital data, such as patient information and pathological test information, on an inline basis is disclosed as including a central data processing apparatus for storing and processing such data, a storage area in said information to be acted on, and providing for storage of new information, and a plurality of remote stations providing for data collection and inputting to said storage area, and readout of stored data from said storage area. The storage area in said data processing apparatus includes separately addressed files for relatively long term storage of patient description information, test library information, and past test results, and a transaction file for relatively short term storage of daily transaction data.
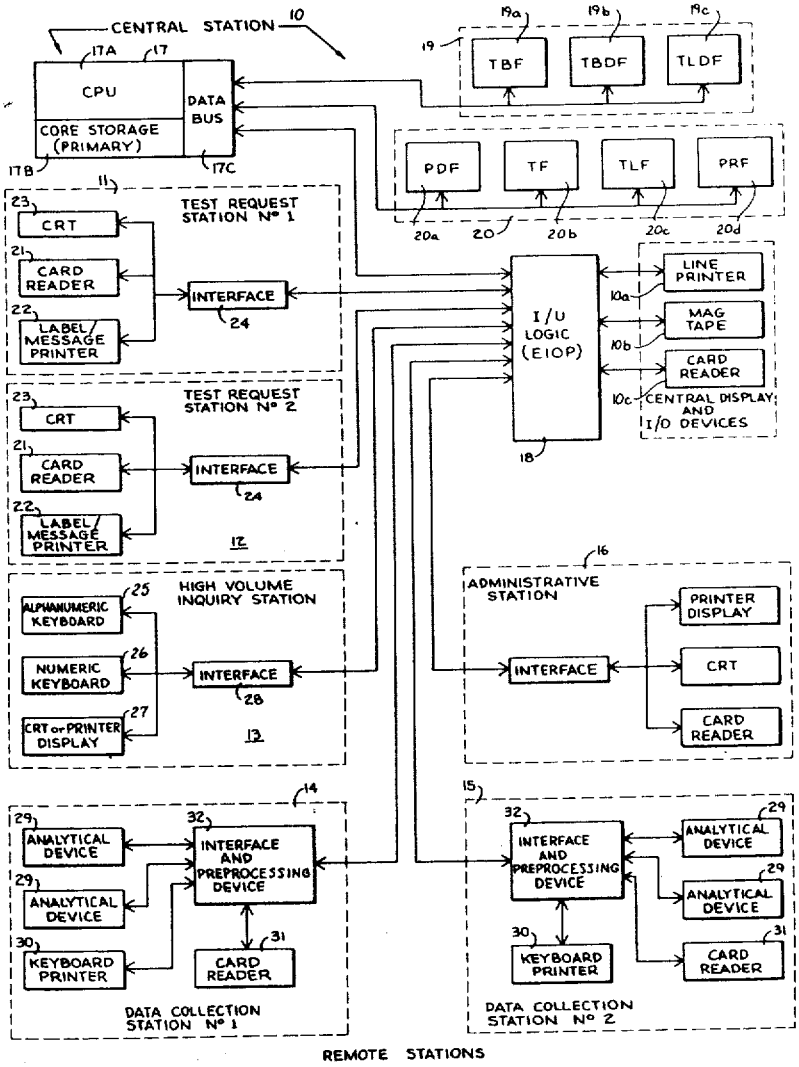
2 Claims, 5 Drawing Figures