US00D372248S

United States Patent [19]

Tahmassebpur

[11] Patent Number: Des. 372,248

[45] Date of Patent: **Jul. 30, 1996

[54] COMMUNICATION DEVICE

[75] Inventor: **Mohammed Tahmassebpur**, Vancouver, Canada

[73] Assignee: **Sierra Wireless, Inc.**, Richmond, Canada

[**] Term: **14 Years**

[21] Appl. No.: **37,179**

[22] Filed: **Apr. 6, 1995**

[52] **U.S. Cl.** **D14/242**; D14/107

[58] **Field of Search** D14/107, 155, D14/137, 138, 140, 142, 240, 241, 242, 256, 147; 379/63, 419, 420, 428, 440, 441, 442

[56] **References Cited**

U.S. PATENT DOCUMENTS

D. 255,882	7/1980	Kim	D14/155 X
D. 303,252	9/1989	Shih	D14/107
D. 309,298	7/1990	Pushelberg	D14/241 X
D. 309,731	8/1990	Takai	D14/107
D. 312,627	12/1990	Gutzmer	D14/107
D. 331,394	12/1992	Kobayashi et al.	D14/107
D. 346,606	5/1994	Harris et al.	D14/256 X
D. 346,607	5/1994	Bhargava et al.	D14/256 X
D. 348,070	6/1994	Vallillee	D14/242 X
D. 352,289	11/1994	Rak	D14/242
D. 354,951	1/1995	Fenton et al.	D14/242 X
D. 364,616	11/1995	Oda et al.	D14/147 X

Primary Examiner—Jeffrey Asch

[57] **CLAIM**

The ornamental design for a communication device, as shown and described.

DESCRIPTION

FIG. **1** is a perspective view of a communication device showing my new design;
FIG. **2** is a left side elevational view thereof the opposite side being a mirror image;
FIG. **3** is a front elevational view thereof;
FIG. **4** is a rear elevational view thereof;
FIG. **5** is a top plan view thereof;
FIG. **6** is a bottom plan view thereof;
FIG. **7** is a left side elevational view thereof with the antenna rotated 90 degrees from its storage position; and,
FIG. **8** is a left side elevational view thereof with the antenna rotated 180 degrees from its storage position.
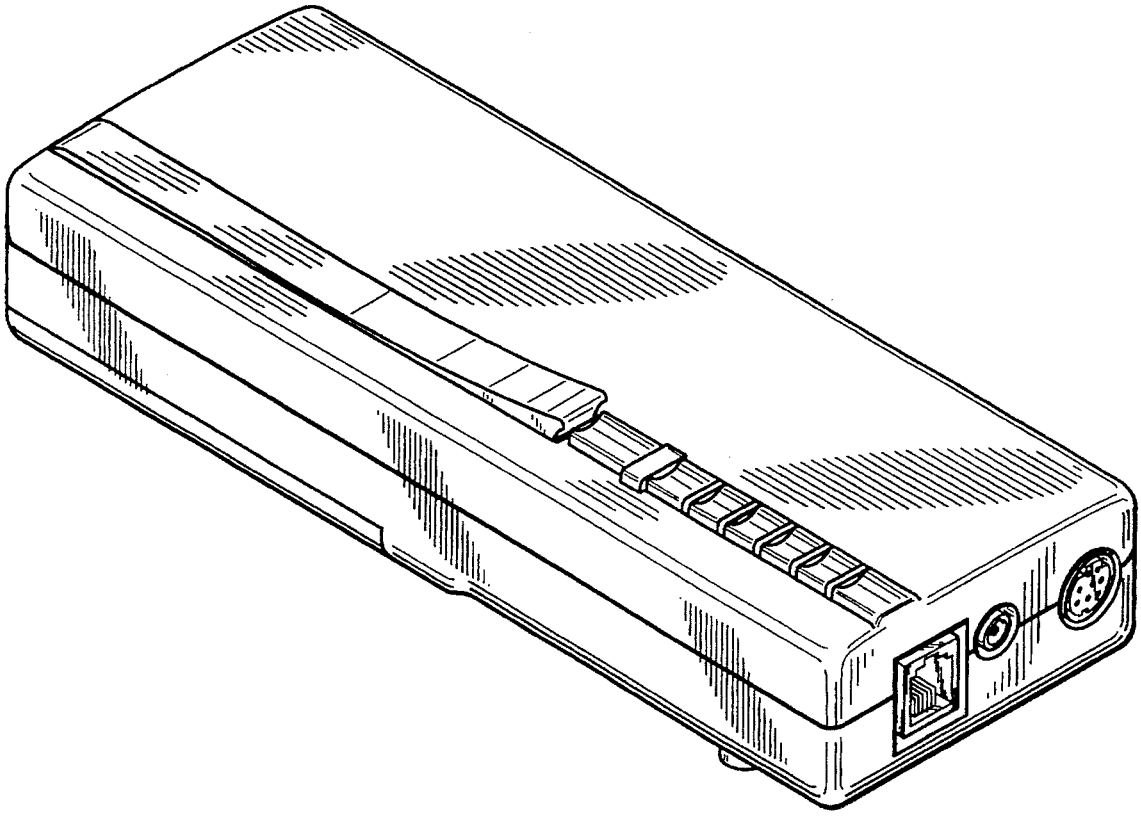
1 Claim, 3 Drawing Sheets