US008469948B2

(12) **United States Patent**
Dishler et al.

(10) **Patent No.: US 8,469,948 B2**
(45) **Date of Patent: Jun. 25, 2013**

(54) **METHODS AND DEVICES FOR FORMING CORNEAL CHANNELS**

(75) Inventors: **Jon Dishler**, Cherry Hills Village, CO (US); **Ned Schneider**, Aliso Viejo, CA (US)

(73) Assignee: **ReVision Optics, Inc.**, Lake Forest, CA (US)

(*) Notice: Subject to any disclaimer, the term of this patent is extended or adjusted under 35 U.S.C. 154(b) by 84 days.

(21) Appl. No.: **12/861,656**

(22) Filed: **Aug. 23, 2010**

(65) **Prior Publication Data**

US 2012/0046680 A1 Feb. 23, 2012

(51) **Int. Cl.**
A61B 18/18 (2006.01)

(52) **U.S. Cl.**
USPC **606/5**

(58) **Field of Classification Search**
USPC 606/4–6, 107, 166; 623/5.11–5.16
See application file for complete search history.

(56) **References Cited**

U.S. PATENT DOCUMENTS

2,714,721	A	8/1955	Stone, Jr.
3,091,328	A	5/1963	Leonardos
3,168,100	A	2/1965	Rich
3,343,657	A	9/1967	Speshyock
3,379,200	A	4/1968	Pennell
3,482,906	A	12/1969	Volk
3,743,337	A	7/1973	Crary
3,770,113	A	11/1973	Thomas
3,879,076	A	4/1975	Barnett
3,950,315	A	4/1976	Cleaver
3,996,627	A	12/1976	Deeg et al.
4,030,480	A	6/1977	Meyer
4,037,604	A	7/1977	Newkirk
4,039,827	A	8/1977	Zdrok et al.
4,065,816	A	1/1978	Sawyer
4,071,272	A	1/1978	Drdlik
4,093,291	A	6/1978	Schurgin
4,136,406	A	1/1979	Norris
4,157,718	A	6/1979	Baehr
4,184,491	A	1/1980	McGannon
4,194,814	A	3/1980	Fischer et al.
4,238,524	A	12/1980	LaLiberte et al.
4,257,521	A	3/1981	Poler
4,268,133	A	5/1981	Fischer et al.
4,326,306	A	4/1982	Poler
4,357,940	A	11/1982	Muller
4,392,569	A	7/1983	Shoup
4,418,991	A	12/1983	Breger
4,423,809	A	1/1984	Mazzocco

(Continued)

FOREIGN PATENT DOCUMENTS

DE	3208729	A1	9/1983
EP	0308077	A2	3/1989

(Continued)

OTHER PUBLICATIONS

Alio, J. J., et al., "Intracorneal Inlay Complicated by Intrastomal Epithelial Opacification," Arch Ophthalmol, vol. 122, Oct. 2004.

(Continued)

Primary Examiner — Ryan Severson
Assistant Examiner — David Eastwood
(74) *Attorney, Agent, or Firm* — Shay Glenn LLP

(57) **ABSTRACT**

Instruments for creating a corneal channel and methods of use.
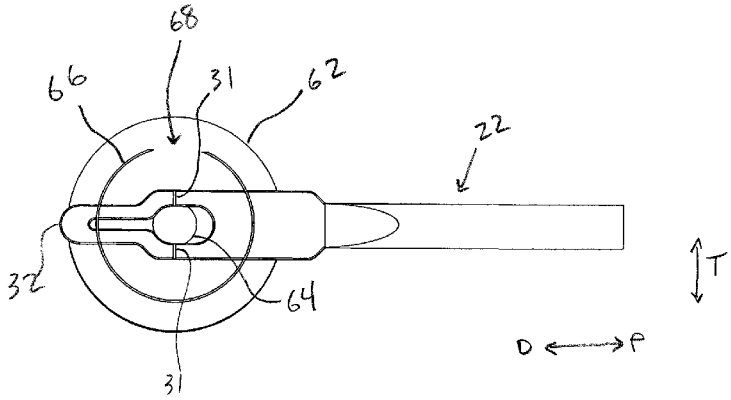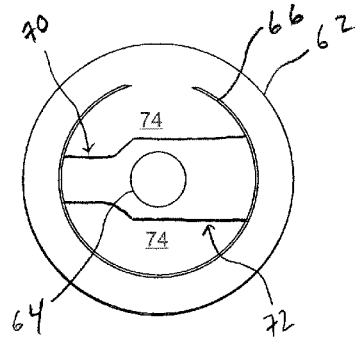
23 Claims, 17 Drawing Sheets