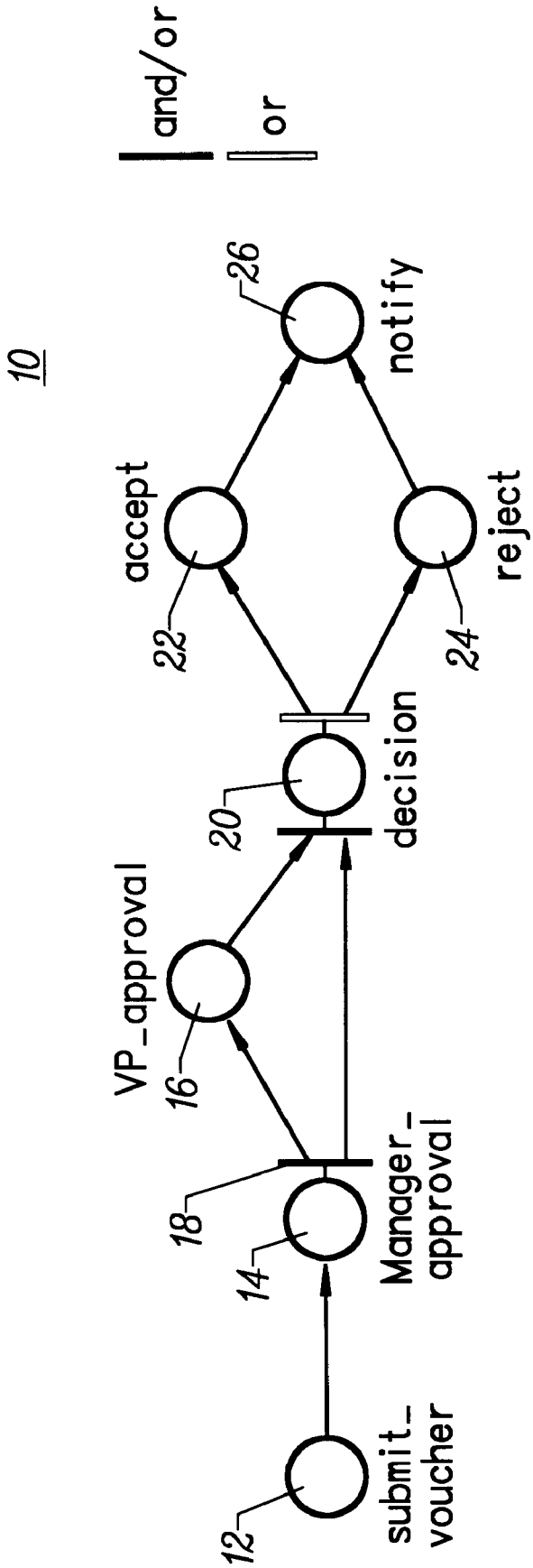
10
and/or
or
12
submit_
voucher
14
Manager_
approval
18
16
VP_approval
20
decision
22
accept
24
reject
26
notify

FIG. 1