FIG. 1

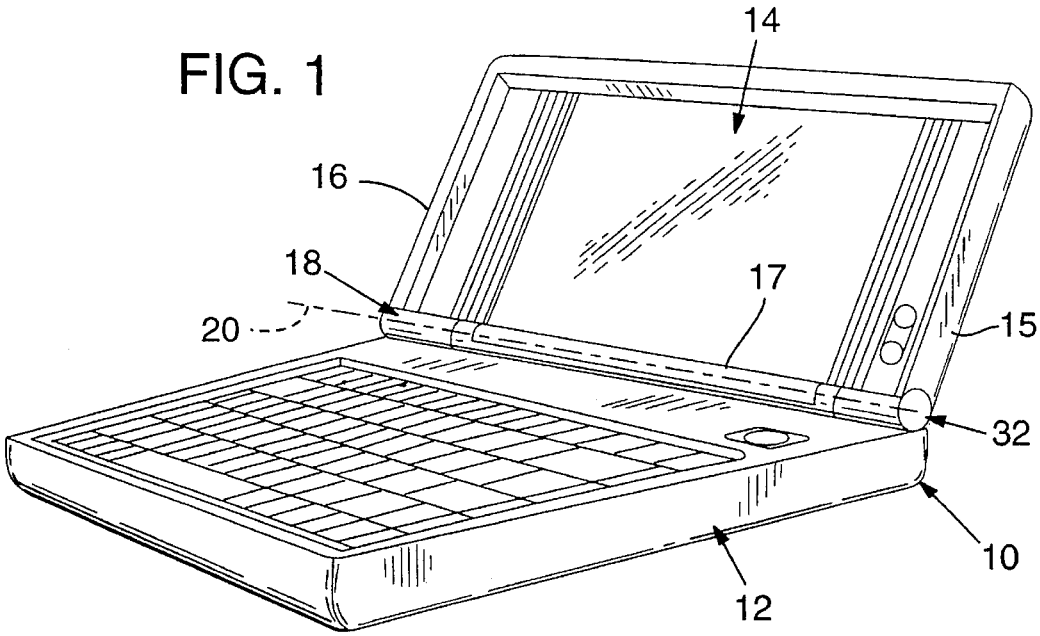
14
16
18
20
17
15
32
10
12

FIG. 2

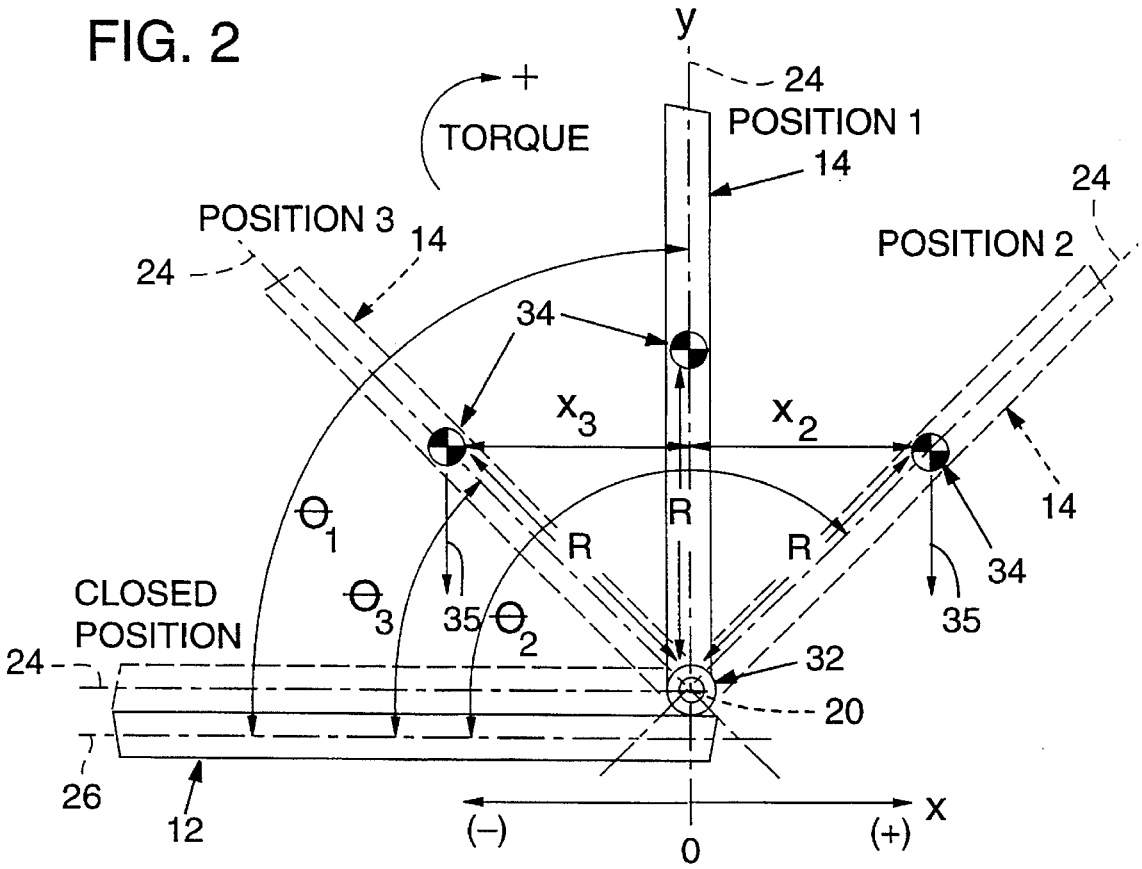
y
+
TORQUE
24
POSITION 1
14
POSITION 3
14
24
24
POSITION 2
34
x_3
x_2
14
Θ_1
R
R
R
34
CLOSED
POSITION
Θ_3
35
Θ_2
35
24
32
20
26
12
(−)
0
(+)
x