US005663748A

United States Patent [19]

Huffman et al.

[11] **Patent Number: 5,663,748**

[45] **Date of Patent: Sep. 2, 1997**

[54] **ELECTRONIC BOOK HAVING HIGHLIGHTING FEATURE**

[75] Inventors: **James R. Huffman**, Austin, Tex.; **Ronald D. Cruickshank**, Durham, N.C.; **Shrirang Nikanth Jambhekar**, Schaumburg, Ill.; **Jeffrey Van Myers**, Driftwood; **Russell L. Collins**, Austin, both of Tex.

[73] Assignee: **Motorola, Inc.**, Schaumburg, Ill.

[21] Appl. No.: **572,469**

[22] Filed: **Dec. 14, 1995**

[51] **Int. Cl.**[6] **G09G 1/00**

[52] **U.S. Cl.** **345/173**; 345/77; 345/901; 304/188; 304/708.1; 304/709.1; 434/317

[58] **Field of Search** 345/901, 84, 104, 345/77; 364/188, 708.1, 709.01; 369/32; 434/317, 308

[56] **References Cited**

U.S. PATENT DOCUMENTS

4,159,417	6/1979	Rubincam	235/375
4,160,242	7/1979	Fowler et al.	340/711
4,350,070	9/1982	Bahu	84/1.03
4,397,635	8/1983	Samuels	434/178
4,579,533	4/1986	Anderson et al.	434/157
4,639,225	1/1987	Washizuka	434/308
4,774,596	9/1988	Hashimoto	358/335
4,779,080	10/1988	Coughlin et al.	340/712
4,820,167	4/1989	Nobles et al.	434/336
4,854,878	8/1989	Malvino et al.	434/335
4,855,725	8/1989	Fernandez	340/706
4,884,974	12/1989	DeSmet	434/317
4,899,292	2/1990	Montagna et al.	364/521
4,912,671	3/1990	Ishida	364/900
4,985,697	1/1991	Boulton	340/750
4,994,912	2/1991	Lumelsky et al.	358/140
4,997,374	3/1991	Simone	434/317
5,021,989	6/1991	Fujisawa et al.	364/900
5,146,552	9/1992	Cassorla et al.	395/145
5,157,783	10/1992	Anderson et al.	395/600
5,165,016	11/1992	Takahashi	395/165
5,167,508	12/1992	Mc Taggart	434/317
5,173,051	12/1992	May et al.	434/118
5,199,104	3/1993	Hirayama	395/145
5,208,745	5/1993	Quentin et al.	364/188
5,214,696	5/1993	Keiser, II et al.	380/4
5,228,859	7/1993	Rowe	434/118
5,233,333	8/1993	Borsuk	340/731
5,239,665	8/1993	Tsuchiya	395/800
5,241,671	8/1993	Reed et al.	395/600
5,243,582	9/1993	Yamauchi et al.	369/32
5,256,067	10/1993	Gildea et al.	434/169
5,275,569	1/1994	Watkins	434/157
5,301,172	4/1994	Richards et al.	369/32
5,302,132	4/1994	Corder	434/156
5,339,091	8/1994	Yamazaki et al.	345/104
5,350,303	9/1994	Fox et al.	434/118
5,351,190	9/1994	Kondo	364/419.08
5,355,352	10/1994	Kobayashi et al.	368/281
5,417,575	5/1995	Mc Taggart	434/317
5,524,201	6/1996	Shwarts et al.	395/161
5,534,888	7/1996	Lebby et al.	345/121

OTHER PUBLICATIONS

"A retiree who has spent a lifetime tinkering with electronics has dreamed up a device to read computerized books." by Fred Wright, Jr. Tribune Correspondent, Story in Tampa Tribune, Saturday, Aug. 26, 1995.

Primary Examiner—Kee M. Tung
Assistant Examiner—Vincent E. Kovalick
Attorney, Agent, or Firm—Darleen J. Stockley

[57] **ABSTRACT**

An electronic book includes a book-shaped housing having a first housing member pivotably connected to a second housing member to open and close in a book-like manner. A touchscreen displays a page of the text represented by the machine-readable data. A user-initiated event selecting a portion of the text is received by the touchscreen. The touchscreen displays the portion of the text in a highlighted form. The processor stores an indicator of the portion of the text to be highlighted in the removable machine-readable storage medium to remain with the text when the removable machine-readable storage medium is removed from the electronic book.
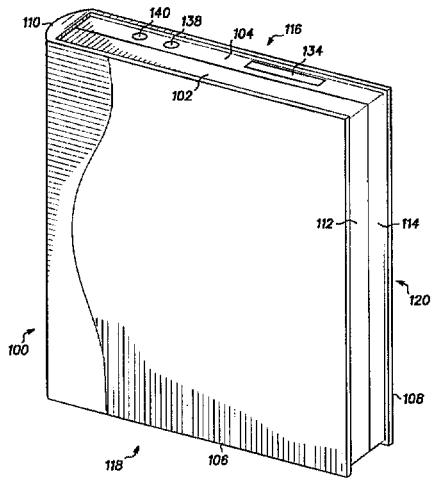
20 Claims, 29 Drawing Sheets