# United States Patent [19]

**Hyatt**

[11] **4,060,848**

[45] **Nov. 29, 1977**


[54] **ELECTRONIC CALCULATOR SYSTEM HAVING AUDIO MESSAGES FOR OPERATOR INTERACTION**


[76] Inventor: **Gilbert Peter Hyatt**, P.O. Box 4584, Anaheim, Calif. 92803



[21] Appl. No.: **325,941**

[22] Filed: **Jan. 22, 1973**

**Related U.S. Application Data**

[63] Continuation-in-part of Ser. No. 101,881, Dec. 28, 1970.

[51] **Int. Cl.**[2] ..... **G06F 3/16**

[52] **U.S. Cl.** ..... **364/200**

[58] **Field of Search** ..... 340/172.5, 149, 52 R, 340/148; 179/100.2 R, 1 SA, 1 SM, 1 SP, 1 SC, 2 CA, 15.55; 235/151; 445/1; 364/200



[56] **References Cited**

U.S. PATENT DOCUMENTS

| | | | |
|---|---|---|---|
| 3,088,661 | 5/1963 | Brigham et al. | 179/100.2 R X |
| 3,297,107 | 1/1967 | Shipp | 179/100.2 R X |
| 3,332,071 | 7/1967 | Goldman et al. | 340/172.5 |
| 3,566,365 | 2/1971 | Rawson et al. | 340/172.5 |
| 3,566,370 | 2/1971 | Worthington, Jr. et al. | 340/172.5 |
| 3,579,201 | 5/1971 | Langley | 340/172.5 |
| 3,619,509 | 11/1971 | Barger et al. | 179/1 SC |
| 3,639,691 | 2/1972 | Beninghof, Jr. | 179/1 SP |
| 3,641,496 | 2/1972 | Slavin | 340/148 |
| 3,654,708 | 4/1972 | Brudner | 340/172.5 X |
| 3,679,875 | 7/1972 | Rawson et al. | 340/149 R |
| 3,681,756 | 8/1972 | Burkhard et al. | 340/172.5 |
| 3,686,637 | 8/1972 | Zachar et al. | 340/172.5 |
| 3,688,271 | 8/1972 | Rouse | 340/172.5 |
| 3,702,988 | 11/1972 | Haney et al. | 340/172.5 |
| 3,704,345 | 11/1972 | Coker et al. | 179/1 SM |
| 3,723,655 | 3/1973 | Zucker et al. | 179/2 CA |
| 3,727,190 | 4/1973 | Vogelman et al. | 340/172.5 |
| 3,737,863 | 6/1973 | Rowland et al. | 340/172.5 |
| 3,744,030 | 7/1973 | Kuljian | 340/172.5 |
| 3,747,069 | 7/1973 | Hershberg | 340/172.5 |
| 3,778,774 | 12/1973 | Philipps et al. | 340/172.5 |
| 3,810,106 | 5/1974 | Nadler et al. | 340/172.5 |
| 3,820,071 | 6/1974 | Angus | 179/2 CA |
| 3,828,132 | 8/1974 | Flanagan et al. | 179/1 SA |
| 3,870,818 | 3/1975 | Barton et al. | 179/1 SM |
| 3,892,919 | 7/1975 | Ichikawa | 179/1 SM |



*Primary Examiner*—Harvey E. Springborn
*Attorney, Agent, or Firm*—Gilbert P. Hyatt



[57] **ABSTRACT**

A calculator system is provided using a stored program data processor and an audio message subsystem to process digital information and to provide audio messages for operator interaction. The calculator system utilizes a digital data processor to execute program routines to process digital information and to communicate with an operator using audio messages. Digital message information is stored in a digital memory and is accessed in response to operator generated signals to provide audio messages.

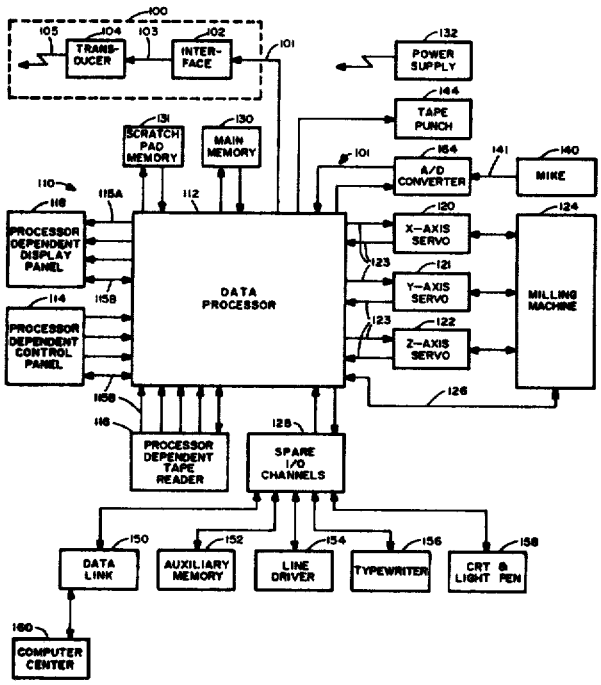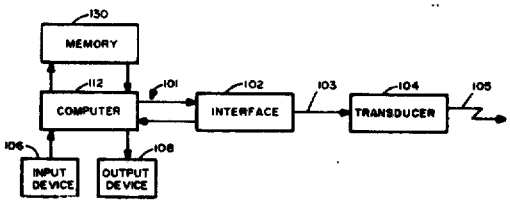
**4 Claims, 12 Drawing Figures**