US006660648B1

(12) **United States Patent**
Galambos et al.

(10) **Patent No.: US 6,660,648 B1**
(45) **Date of Patent: Dec. 9, 2003**

(54) **PROCESS FOR MANUFACTURE OF SEMIPERMEABLE SILICON NITRIDE MEMBRANES**

(75) Inventors: **Paul Charles Galambos**, Albuquerque, NM (US); **Randy J. Shul**, Albuquerque, NM (US); **Christi Gober Willison**, Albuquerque, NM (US)

(73) Assignee: **Sandia Corporation**, Albuquerque, NM (US)

(*) Notice: Subject to any disclaimer, the term of this patent is extended or adjusted under 35 U.S.C. 154(b) by 298 days.

(21) Appl. No.: **09/678,418**

(22) Filed: **Oct. 2, 2000**

(51) **Int. Cl.**[7] **H01L 21/302**
(52) **U.S. Cl.** **438/714**; 438/724
(58) **Field of Search** 438/706, 714, 438/719, 723, 724

(56) **References Cited**

U.S. PATENT DOCUMENTS

3,773,567 A * 11/1973 Gillespie 438/94
5,543,046 A * 8/1996 Van Rijn 210/490
5,722,442 A * 3/1998 Hoffman et al. 134/102.1
5,843,520 A * 12/1998 Liu 427/124
5,930,669 A * 7/1999 Uzoh 438/627
5,935,877 A * 8/1999 Autryve 438/714
5,962,081 A * 10/1999 Ohman et al. 216/2
6,334,856 B1 * 1/2002 Allen et al. 128/898

* cited by examiner

Primary Examiner—Kin-Chan Chen
(74) *Attorney, Agent, or Firm*—Brian W. Dodson; John P. Hohimer

(57) **ABSTRACT**

A new class of semipermeable membranes, and techniques for their fabrication, have been developed. These membranes, formed by appropriate etching of a deposited silicon nitride layer, are robust, easily manufacturable, and compatible with a wide range of silicon micromachining techniques.
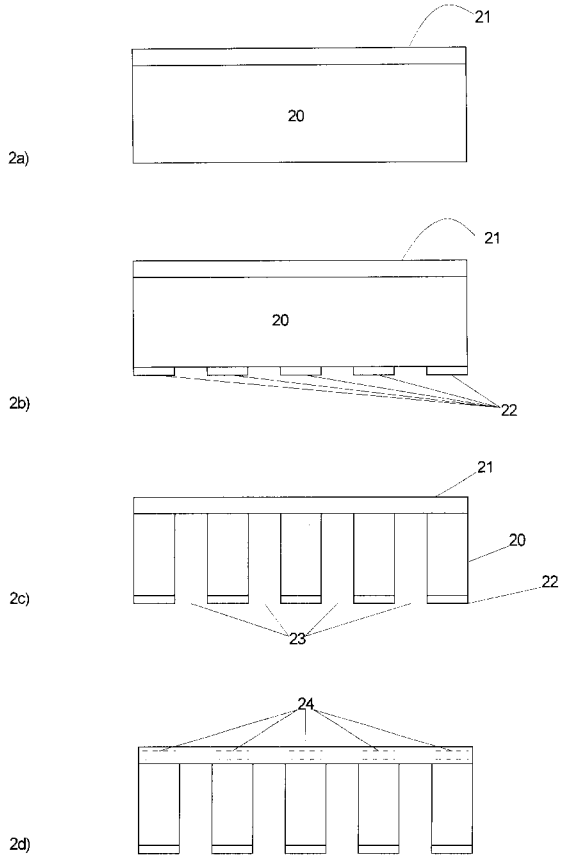
8 Claims, 2 Drawing Sheets