INSECT KILLING DEVICE

Filed Dec. 13, 1939 2 Sheets-Sheet 2

Fig. 3

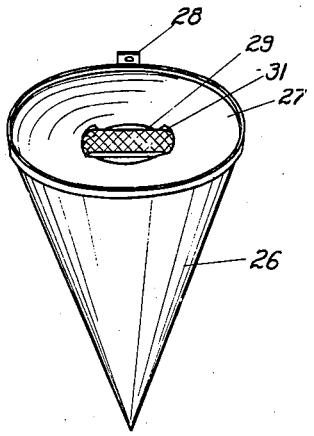

Fig. 4

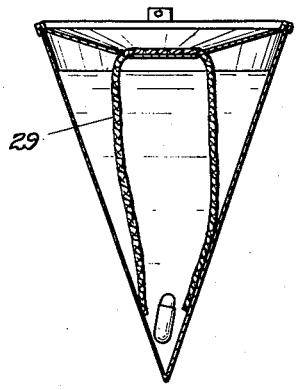

Fig. 5

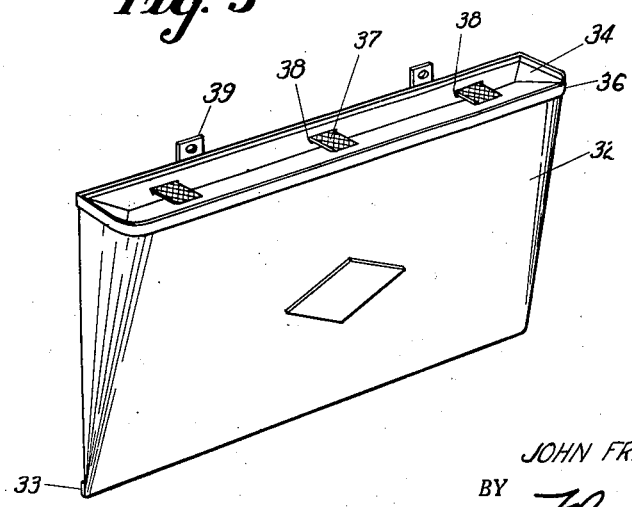

INVENTOR.
JOHN FRANK KUBALEK
BY Flournoy Corey.
ATTORNEY.